Please Read

LUTRON®

Dimming and Switching **Panels**

Installation Guide
LCP128™ (LCP) and
GRAFIK Systems™ (LP and CCP)

English
Español
Deutsch
Français
中文
Português
Nederlands
Italiano

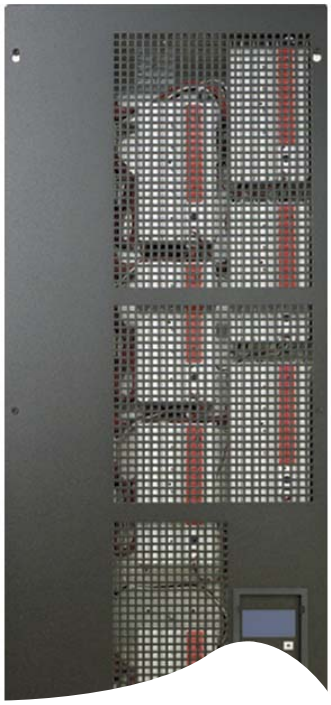

LCP Panel shown

Contents

Overview

Use this guide to successfully install a dimming and switching panel. This guide describes panel installation, wiring, and load activation.

LUTRON®

Panel Model Number Guide

LCP128™ (LCP) (120 V~ only)

See page 5 for 230/220-240 V~

Example

LCP-2X2D1A4T-1204ML-20

Prefix | Modules: Quantity and Type | Feed Voltage | Feed Type | Branch Circuit Breaker Rating

Prefix

LCP = LCP dimming panel

Module Types

_X _S _D _Q _A _M _F _T

List modules in the order shown above. Insert the quantity before each module code. Omit codes for modules not used in panel. See table below for limits on numbers of modules per panel.

X = Four-Circuit Switching (Relay) (XP)
S = One-Circuit Dimming (1U)
D = Two-Circuit Dimming (2U)
Q = Four-Circuit Dimming (4U)
A = Four-Circuit Adaptive Dimming (4A)
M = Four-Circuit Motor (4M)
F = Four-Circuit Quiet Fan Speed (4FSQ)
T = 0-10 V, DALI (broadcast), DSI, and PWM Ballast Control (TVM)

Feed Voltage

120 for 120 V~

Feed Type/Input Ratings

FT = Feed-through panel (circuit breakers not included) / 120 V~
3M or 3ML = 1 phase 3 wire feed (split phase) / 120/240 V~
4M or 4ML = 3 phase 4 wire feed / 120/208 V~

Branch Circuit Breaker Rating

Omit for feed-through panels
20 for 20 A branch circuit breakers

Frequency - All Model Numbers and Voltages

50/60 Hz

Output (Load) Ratings

Module Type	Rating
XP	16 A per circuit
1U, 2U, 4U	16 A per module
4A	16 A per module, 10 A per output
4M	16 A per module, 5 A per output (1/4 HP motor), 1 motor per output
4FSQ	2 A per output (single ceiling fan)
TVM	50 mA per channel, 750 mA per system

Module Quantity Limits

Panel Size	Feed type	TVM	4A 4U 4M	XP
Mini	Feed-through	NA	Any combination up to 3 modules	
Mini	Feed-through	0-4	Any combination up to 2 modules; must have 1 4U or XP module minimum; each 4U or XP module can control only 2 TVM modules	
Mini	Breakers	NA	Any combination up to 3 modules	0
Mini	Breakers	0-4	Any combination up to 2 modules; must have 1 4U module minimum; each 4U module can control only 2 TVM modules	0
Standard	Feed-through	NA	Any combination up to 9 modules	
Standard	Feed-through	0-12	Any combination up to 8 modules; must have 1 4U or XP module minimum; each 4U or XP module can control only 2 TVM modules	
Standard	Breakers (main lugs)	NA	Any combination up to 9 modules	0
Standard	Breakers (main lugs)	NA	Any combination up to 7 modules	
Standard	Breakers (main lugs)	0-12	Any combination up to 7 modules; must have 1 4U module minimum; each 4U module can control only 2 TVM modules	0
Standard	Breakers (main lugs)	0-12	Any combination up to 5 modules; must have 1 4U or XP module minimum; each 4U or XP module can control only 2 TVM modules	

Notes

- Consult Lutron for panels with custom breaker needs.
- TVM = 0 is a TVM-ready panel; TVM modules can easily be installed in the future.
- TVM = NA is not TVM-ready

GRAFIK Systems™ (LP) (all voltages)

Example

LP7/28-1204ML-20-CGP____

- Prefix: LP
- Number of Dimming Modules: 7
- Number of Dimming Circuits: 28
- Feed Voltage: 120
- Feed Type: 4ML
- Branch Circuit Breaker Rating: 20
- Custom Panel Suffix (contact Lutron for custom options): CGP____

Prefix

LP = LP dimming panel

Number of Dimming Modules

Indicates number of 4-circuit (4U) dimming modules in the panel: 1 through 8; also indicates number of full load circuits

Number of Dimming Circuits

Indicates number of dimming circuits in the panel: 4, 8, 12, 16, 20, 24, 28, or 32; each module has four dimming circuits

Feed Voltage

120 = 120 V~
230 = 230 V~ (CE)
240 = 220-240 V~ (non-CE)

Feed Type	Input Ratings
2M or 2ML = 1 phase 2 wire feed	120 V~
3M or 3ML = 1 phase 3 wire feed (split phase)	120/240 V~
4M or 4ML = 3 phase 4 wire feed	120/208 V~

Mxx = Main Breaker;
xx = breaker size in amps (custom panel option)
IS = 3 phase 4 wire isolation switch (230/220-240 V~ only)

Branch Circuit Breaker Rating

20 for 20 A branch circuit breakers (120 V~ only)
20 A branch circuit breakers have a 16 A continuous load rating
15 for 15 A branch circuit breakers (120 V~ only)
15 A branch circuit breakers have a 12 A continuous load rating
13 for 13 A branch circuit breakers (230 V~ CE only)
16 for 16 A branch circuit breakers (220-240 V~ non-CE only)

Custom Panel Suffix (optional)

Indicates panel with special options

Panel Model Number Guide (continued)

GRAFIK Systems™ (CCP) (120 V~ only)

Example

CCP-2X2L 1A4T-1204ML-20-CGP___

Prefix | Modules: Quantity and Type | Feed Voltage | Feed Type | Branch Circuit Breaker Rating | Custom Panel Suffix (contact Lutron for custom options)

Prefix

CCP = Custom combination panel

Module Types

_X _L _A _M _F _T

List modules in the order shown above. Insert the quantity before each module code. Omit codes for modules not used in panel. See table below for limits on numbers of modules per panel.

X = Four-Circuit Switching (Relay) (XP)
L = Four-Circuit Dimming (4U)
A = Four-Circuit Adaptive Dimming (4A)
M = Four-Circuit Motor (4M)
F = Four-Circuit Quiet Fan Speed (4FSQ)
T = 0-10 V, DALI (broadcast), DSI, and PWM Ballast Control (TVM)

Feed Voltage

120 for 120 V~

Feed Type / Input Ratings

FT = feed-through panel (circuit breakers not included) / 120 V~
3M or 3ML = 1 phase 3 wire feed (split phase) / 120/240 V~
4M or 4ML = 3 phase 4 wire feed / 120/208 V~
2 = 1 phase 2 wire input breakers (mini only)
3 = 1 phase 3 wire input breakers (mini only)
4 = 3 phase 4 wire input breakers (mini only)

Branch Circuit Breaker Rating

20 = 20 A branch circuit breakers
15 = 15 A branch circuit breakers

Custom Panel Suffix (optional)

Indicates panel with special options

Frequency

(All Model Numbers and Voltages): 50/60 Hz

Output (Load) Ratings

Module Type	Rating
XP, 4U	16 A per circuit
4A	16 A per module, 10 A per output
4M	16 A per module, 5 A per output (1/4 HP motor)
4FSQ	2 A per output (single ceiling fan)
TVM	50 mA per channel, 750 mA per system

Module Quantity Limits

Panel Size	Feed type	TVM	4A 4U 4M	XP
Mini	Feed-through	NA	Any combination up to 3 modules	
Mini	Feed-through	0-4	Any combination up to 2 modules; must have 1 4U or XP module minimum; each 4U or XP module can control only 2 TVM modules	
Mini	Breakers	NA	Any combination up to 3 modules	0
Mini	Breakers	0-4	Any combination up to 2 modules; must have 1 4U module minimum; each 4U module can control only 2 TVM modules	0
Standard	Feed-through	NA	Any combination up to 9 modules	
Standard	Feed-through	0-12	Any combination up to 8 modules; must have 1 4U or XP module minimum; each 4U or XP module can control only 2 TVM modules	
Standard	Breakers (main lugs)	NA	Any combination up to 9 modules	0
Standard	Breakers (main lugs)	NA	Any combination up to 7 modules	
Standard	Breakers (main lugs)	0-12	Any combination up to 8 modules; must have 1 4U module minimum; each 4U module can control only 2 TVM modules	0
Standard	Breakers (main lugs)	0-12	Any combination up to 5 modules; must have 1 4U or XP module minimum; each 4U or XP module can control only 2 TVM modules	

Notes

- Consult Lutron for panels with custom breaker needs.
- TVM = 0 is a TVM-ready panel; TVM modules can easily be installed in the future.
- TVM = NA is not TVM-ready

Panel Model Number Guide (continued)

GRAFIK Systems™ (CCP/LCP) (230/220-240 V~ only)

Example

CCP - 1X4L 2T - 2304IS - CE - LCP - CGP___

Prefix | Modules: Quantity and Type | Feed Voltage | Feed Type | Region Suffix | Controller Type | Custom Panel Suffix (contact Lutron for custom options)

Prefix

CCP = Custom combination panel

Module Types

_X _L _E _A _M _T

List modules in the order shown above. Insert the quantity before each module code. Omit codes for modules not used in panel. See table below for limits on numbers of modules per panel.

X = Four-Circuit Switching (Relay) (XP)
L = Four-Circuit Dimming (4U)
E = Four-Circuit Electronic Low Voltage Dimming (4E)
A = Four-Circuit Adaptive Dimming (4A)
M = Four-Circuit Motor (4M)
T = 0-10 V, DALI (broadcast), DSI, and PWM Ballast Control (TVM)

Feed Voltage

230 = 230 V~ (CE)
240 = 220-240 V~ (non-CE)

Feed Type

FT = feed-through panel (circuit breakers not included)
4IS = 3 phase 4 wire isolation switch
2M = 1 phase 2 wire input breakers (mini only)
4M = 3 phase 4 wire input breakers (mini only)

Region Suffix

CE = 230 V~
AU = 220-240 V~
Note: Should match feed voltage

Controller Type

Omit for single-link circuit selector
2L = 2Link™ circuit selector
LCP = LCP128

Custom Panel Suffix (optional)

Indicates panel with special options

Frequency

(All Model Numbers and Voltages)

50/60 Hz

Output (Load) Ratings

Module Type	Rating
XP	16 A per circuit
4U (230 V~)	13 A per module, 10 A per output
4U (240 V~)	16 A per module
4A	13 A per module, 8 A per output
4E	16 A per module, 10 A per output
4M	16 A per module, 5 A per output (1/4 HP motor), 1 motor per output
TVM	50 mA per channel, 750 mA per system

Module Quantity Limits

Panel Size	Feed type	TVM	4A 4U 4E 4M	XP
Mini	Feed-through	NA	Any combination up to 3 modules	
Mini	Feed-through	0-4	Any combination up to 2 modules; must have 1 4U or XP module minimum; each 4U or XP module can control only 2 TVM modules	
Mini	Input breakers	NA	Any combination up to 3 modules	0
Mini	Input breakers	0-4	Any combination up to 2 modules; must have 1 4U module minimum; each 4U module can control only 2 TVM modules	0
Standard	Feed-through	0-12	Any combination up to 8 modules; must have 1 4U or XP module minimum; each 4U or XP module can control only 2 TVM modules	
Standard	Input breakers	0-12	Any combination up to 8 modules; must have 1 4U module minimum; each 4U module can control only 2 TVM modules	0
Standard	Input breakers	0-12	Any combination up to 6 modules; must have 1 4U or XP module minimum; each 4U or XP module can control only 2 TVM modules	

Notes

- Consult Lutron for panels with custom breaker needs.
- TVM = 0 is a TVM-ready panel; TVM modules can easily be installed in the future.
- TVM = NA is not TVM-ready

Panel Dimensions

Mini Panel

Dimensions are in inches (mm).

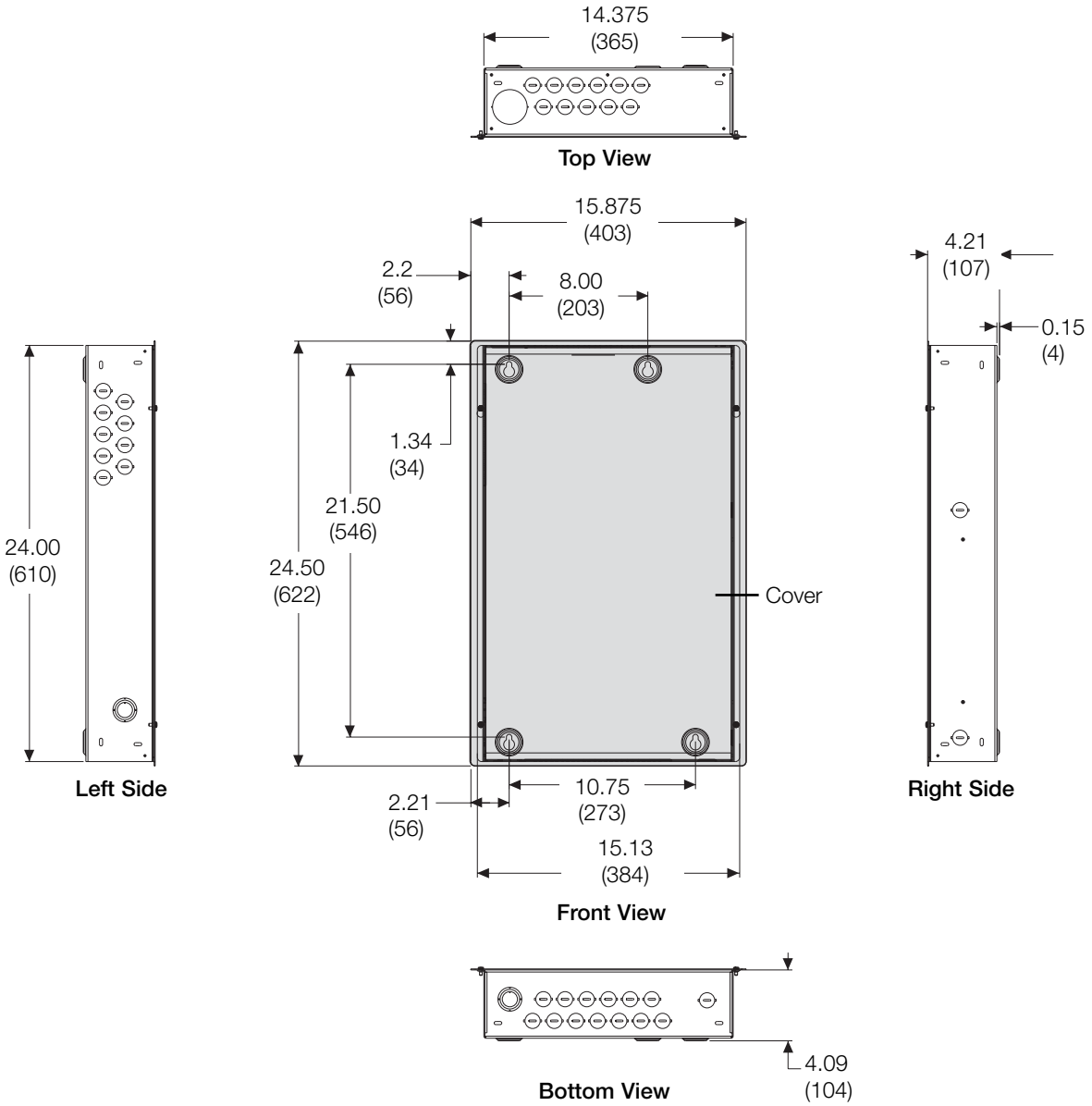

Panel Dimensions (continued)

Standard Panel

Dimensions are in inches (mm).

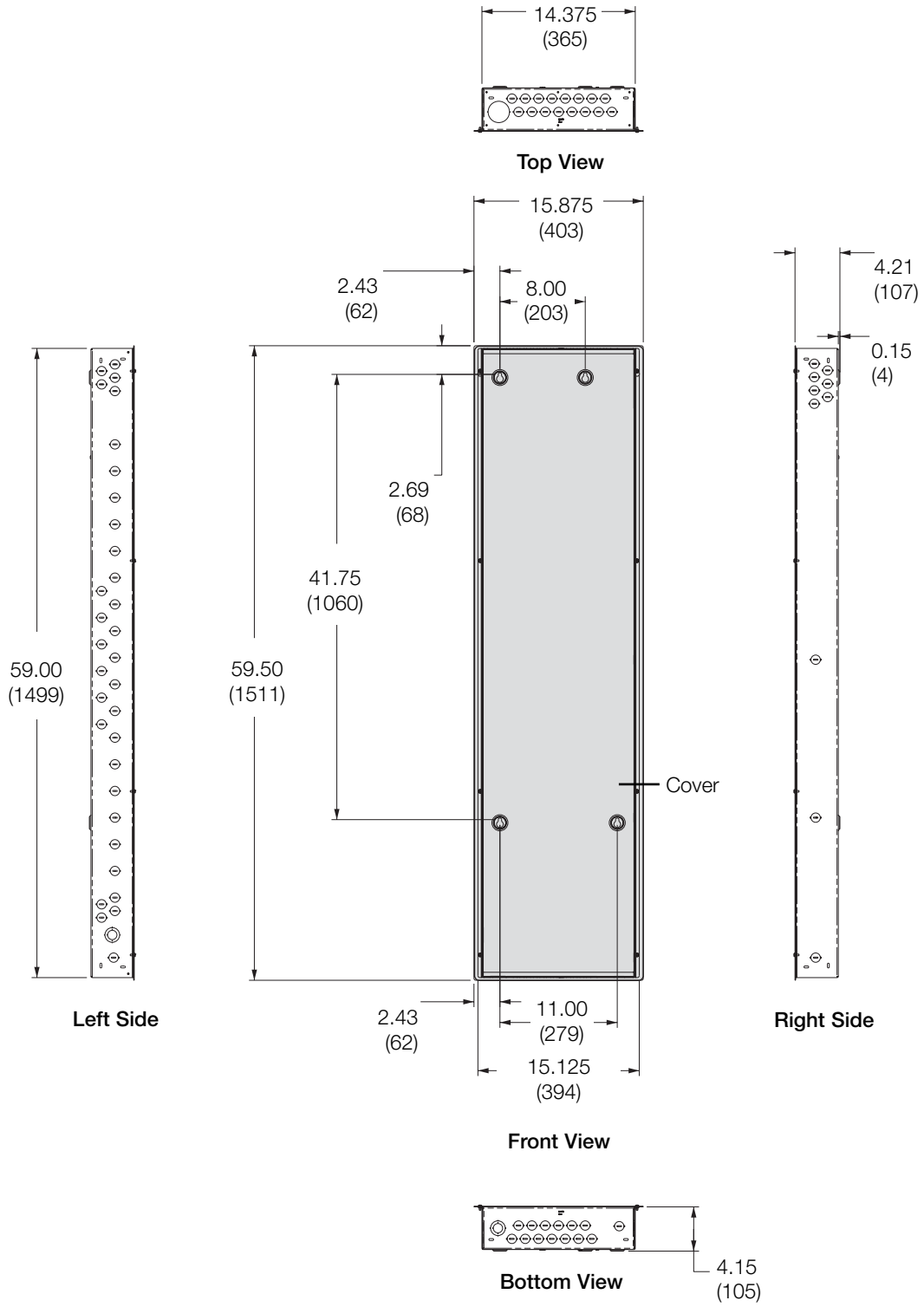

Panel Mounting

Mounting Guidelines

- For Indoor Use Only! NEMA, Type 1 enclosure, IP20.
- Panel generates heat. Mount only where ambient temperature is 32-104 °F (0-40 °C).
- Relative humidity must be < 90% non-condensing.
- Reinforce wall structure for panel weight and local codes; see table.
- Allow 12 in. (305 mm) clearance above and below panel.
- Mount within 7° of true vertical.
- Mount panel where audible noise is acceptable. (Internal relays click.)
- Mount panel so line (mains) voltage wiring is at least 6 ft. (1.8 m) from audio or electronic equipment and associated wiring.
- Install in accordance with all national and local electrical codes.

No. Modules	Max. Heat BTUs (Kcal)/Hr.	Max. Weight w/o Packaging Pounds (kg)
1	90 (22.68)	24 (11)
2	170 (42.84)	35 (16)
3	250 (63.00)	37 (17)
4	330 (83.16)	68 (25)
5	410 (103.32)	71 (26)
6	490 (123.48)	74 (27)
7	570 (143.64)	77 (28)
8	650 (163.80)	80 (29)
9	730 (183.96)	83 (30)

Caution! This equipment is air-cooled. Vents must not be blocked or you will void the warranty.

Caution! 230 V~ panels with 13 A circuit breakers are intended for industrial or commercial use only.

Front View **Side View: Surface Mount** **Side View: Recess Mount**

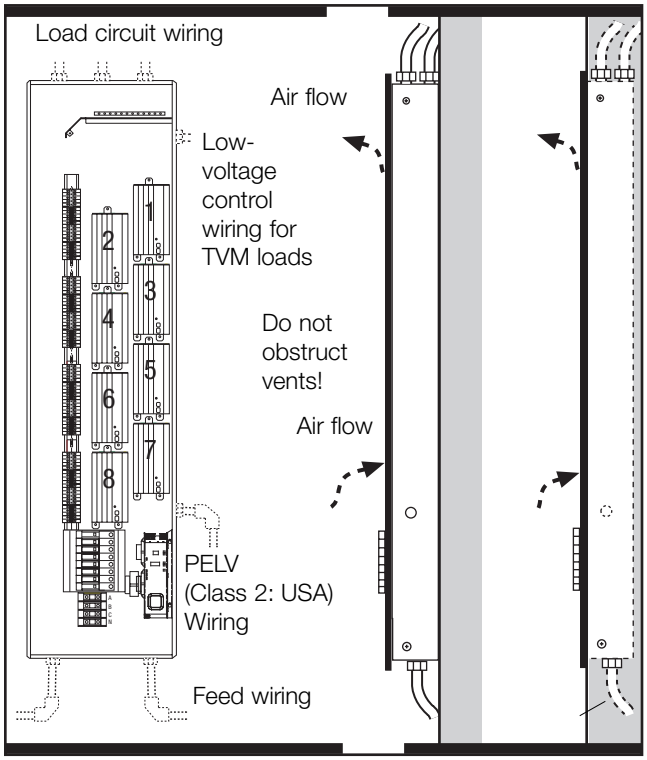

LP8/32-1204ML-20 shown

Surface Mounting

- Lutron recommends using 1/4 in. (6 mm) mounting bolts (maximum size accepted by keyholes).
- Reinforce wall structure as required for weight and local codes.
- Do not mount panel directly to wall board/drywall.

Recess Mounting

- Mount to wall stud by screwing through slots in corners of panel.
- Mount panel between flush and 1/8 in. (3 mm) below finished wall surface.

Recommended Mounting Heights*
(for LCP128 systems)

Mini	45 in. (1143 mm)
Standard	25 in. (635 mm)

* Measure from floor to bottom of panel; optimal viewing height for controller.

System Wiring Overview

Review the options below for information on wiring your panel correctly into your specific system.

A. *LCP128* panel: Refer to the *LCP128 Setup and Operation Manual* for detailed wiring information.

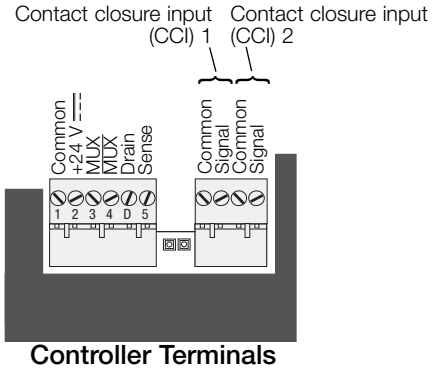

Controller Terminals

B. LP or CCP panel as a part of a *GRAFIK Eye* 4000 lighting system: Refer to the *GRAFIK Eye 4000 Installation, Setup, and Operation Manual* and the system overview pictured here for detailed wiring information.

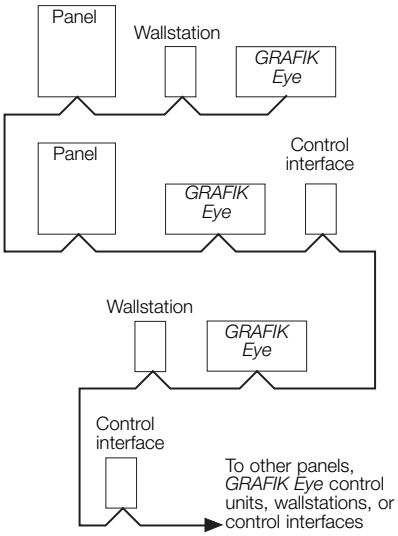

Correct: Daisychain OK

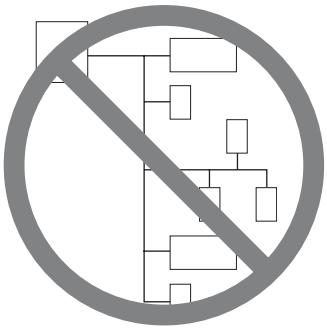

Incorrect: Branch, T-tap, or home run not acceptable

C. LP or CCP panel as a part of a *GRAFIK* 7000 lighting system: Refer to the *GRAFIK7000 Installation, and Maintenance Guide* and the system overview pictured here for detailed wiring information.

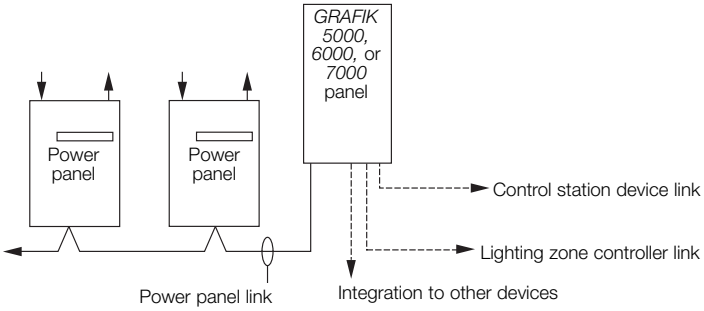

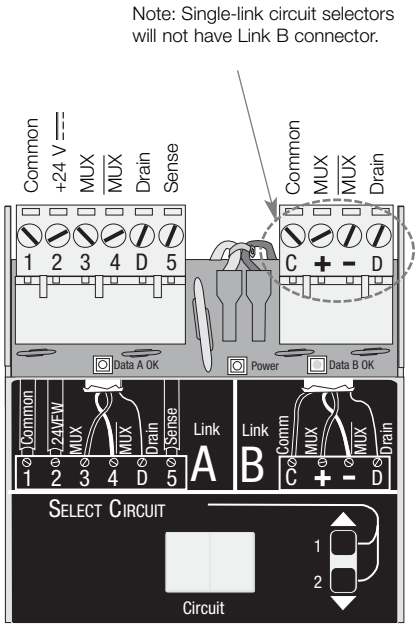

Circuit Selector Terminals

Feed and Load Wiring Overview

Feed Wiring (Mains Voltage Wiring)

- Preferred feed wiring entry for panels with main lugs/isolation switch is from the bottom left of the panel.
- Preferred feed wiring entry for feed-through panels is from the top or bottom left of the panel, wired directly to module terminal blocks.
- Run wiring so that line (mains) voltage wiring will be at least 6 ft. (1.83 m) from sound or electronic equipment and its wiring.
- Refer to Feed Wiring pages for more information.

Load Circuit Wiring

- Connect load wiring to the appropriate terminal block set for each module.
- For 230 V∼ and 240 V∼ panels, “Hot” is referred to as “Live”. Therefore, terminals will be labeled DL and L.
- The Dimmed Hot/Live (DH/DL) terminal block is grouped with a numbered Hot/Live (H/L) (H1, H2, etc./L1, L2, etc.). The number represents both the module and circuit breaker number.
- Output terminal blocks accept one #14-#10 AWG (2.5-4.0 mm^2) wires. Preferred entry is from the top left of the panel.
- Refer to Load Wiring pages for more information.

Caution! Common neutrals are not permitted. Run separate neutrals for each load circuit.

Caution! Panels require entry of wires as specified. Improper entry will block serviceable parts and impede air flow through the panel.

Temporary Lighting

You do not need to install a temporary distribution panel. Connect load wires into the appropriate terminal blocks. Each input breaker can supply power to a load while the bypass jumper protects the module from load faults.

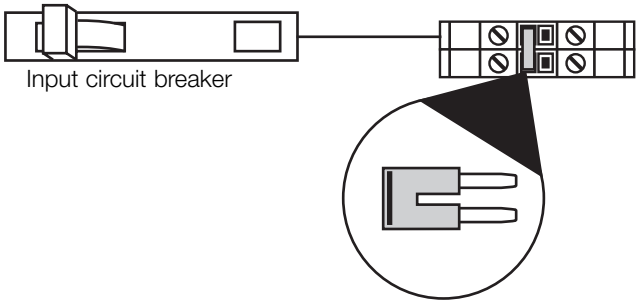

Bypass jumper protects the module from load faults.

Caution! Verify that the panel is fed from the correct voltage. A feed miswire or loss of a feed neutral can cause over-voltage damage to the equipment. Do NOT remove bypass jumpers at this point--they protect the modules from load faults.

LP/LCP/CCP Panels

Feed-Through Panels (all voltages)

Number of Modules	Feed Type	Max. Feed
1 2 3 4 5 6 7 8 9	1Ø, 2W #14-#10 AWG (1.5-4.0 mm^2)	120 V~: 20 A 230 V~: 13 A or 16 A 220-240 V~: 16 A

Panels with Breaker (120 V~ only)

Number of Modules	Feed Type
1 2 3	1Ø, 2W 1Ø, 3W 3Ø, 4W #14-#10 AWG (1.5-4.0 mm^2)

Panels with Main Lugs (120 V~ only)

Number of Modules	Feed Type	Maximum Feed
4 5 6 7 8 9	1Ø, 3W or 3Ø, 4W #14-#2/0 AWG (25-70 mm^2)	175 A

Panels with Breaker (220-240 V~ and 230 V~ only)

Number of Modules	Feed Type
1 2 3	1Ø, 2W 1Ø, 2W 3Ø, 4W #14-#12 AWG (1.5-4.0 mm^2)

Panels with Isolation Switch (220-240 V~ and 230 V~ only)

Number of Modules	Feed Type	Maximum Feed	
		230 V~	220-240 V~
4 5 6 7 8	3Ø, 4W #14-#2/0 AWG (25-70 mm^2)	125 A	125 A

Feed-Through Panel: Feed and Load Wiring (all voltages)

General Notes

- Typical dimming/switching legs shown.
- Do not remove bypass jumpers until after load wiring has been verified.

Wire sizes for power feed, to each input

- Power feed: #14 AWG (2.5 mm^2) to #10 AWG (4.0 mm^2)
- Neutral feed: #14 AWG (2.5 mm^2) to #10 AWG (4.0 mm^2)

Wire sizes for load wiring, from each output

- Dimmed hot (live): #14 AWG (2.5 mm^2) to #10 AWG (4.0 mm^2)
- Load neutral: #14 AWG (2.5 mm^2) to #10 AWG (4.0 mm^2)

Control Circuit Power

- Supplies power for internal operation.
- Requires dedicated feed with same voltage and phase as panel.
- Must be 1/4 in. (6 mm) away from PELV (Class 2: USA) control wiring harness.
- Panel voltage (see pages 2-3) indicates feed voltage.
- For 230 V∼ and 240 V∼ panels, “Hot” is referred to as “Live”. Therefore, terminals will be labeled L and DL.

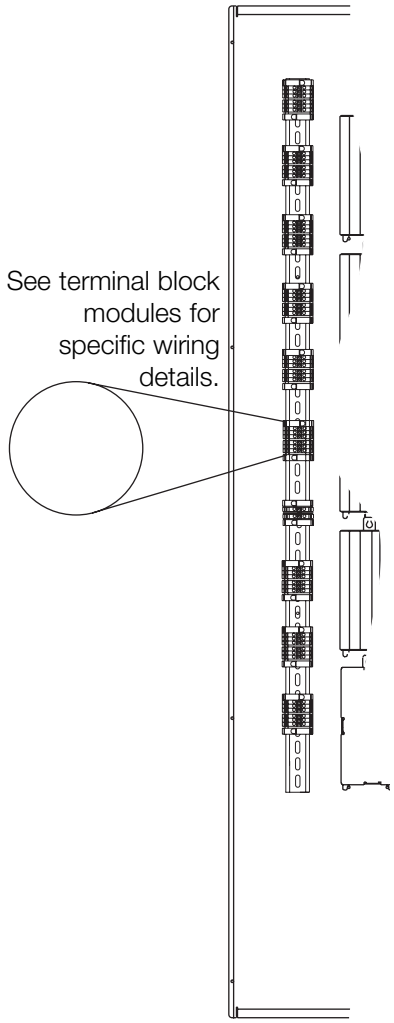

4-Circuit Dimming Module (4U)
4-Circuit Adaptive Dimming Module (4A)
4-Circuit ELV Dimming Module (4E: 230 V∼ and 220-240 V∼ only)
4-Circuit Quiet Fan Speed Module (4FSQ)

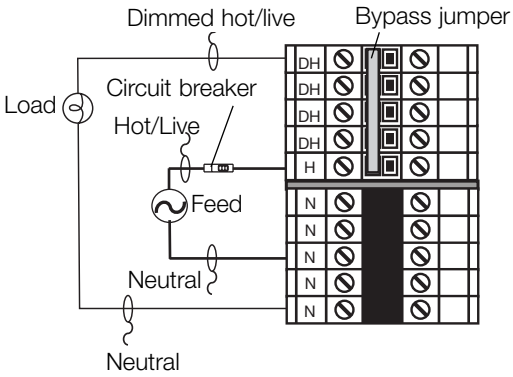

TVM Module

For 0-10 V, PWM, Tridonic® DSI, and DALI loads. Each TVM controls two consecutive circuits of lighting and are the first circuits in the panel. Maximum low-voltage ballast control current: 50 mA per zone, 750 mA per panel. Dimming or switching module is used to switch power to the ballast.

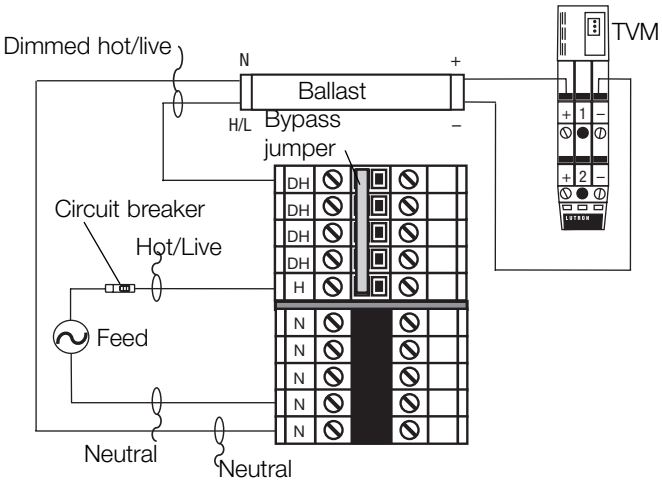

4-Circuit Switching (Relay) Module (XP)

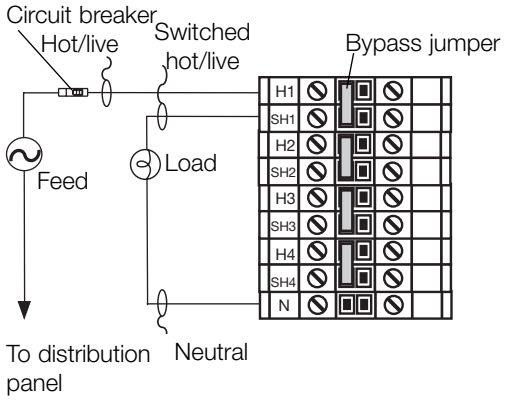

Feed-Through Panel: Feed and Load Wiring (continued)

4-Circuit Motor Module (4M)

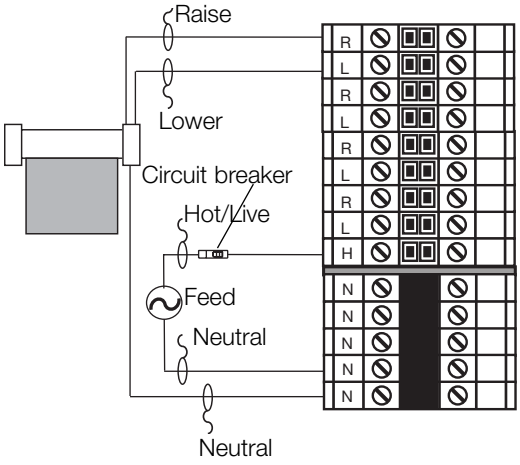

Connecting an NGRX-FDBI to a Panel

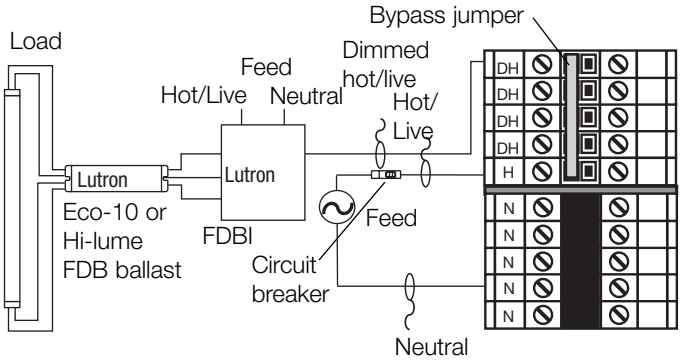

Refer to FDBI Installation Sheet for detailed wiring.

2-Circuit Dimming Module (2U)
(LCP and CCP only)

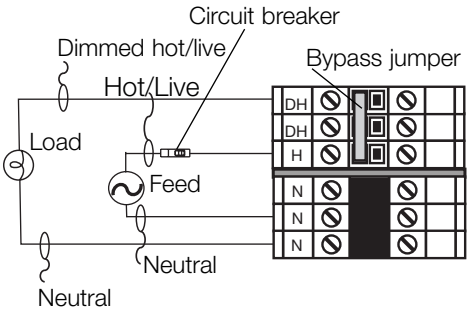

1-Circuit Dimming Module (1U)
(LCP only)

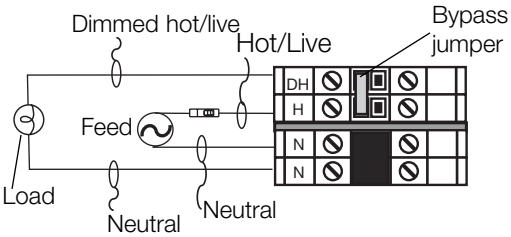

Panel with Main Lugs: Feed Wiring

Dimming and Switching Panels (120 V~ only)

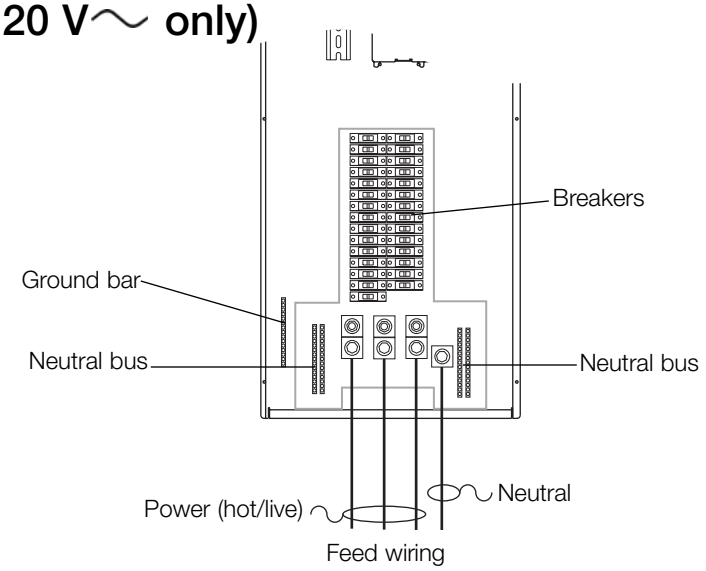

Notes

- See page 15 for load wiring details.
- On **dimming panels** only, the input breaker of Circuit 1 supplies current to Load Circuit 1 and to the Control Wiring (2 A draw max.). Panels with switching modules have a dedicated circuit breaker for the control circuit.

Dimming Panels (120 V~ only)

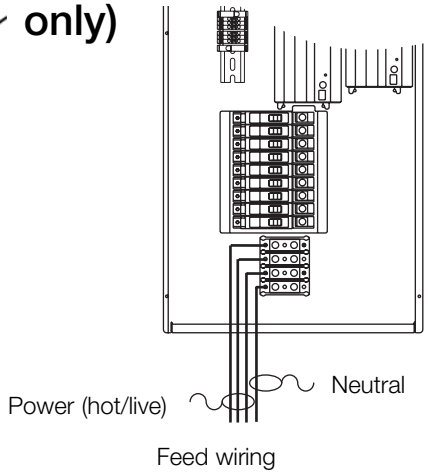

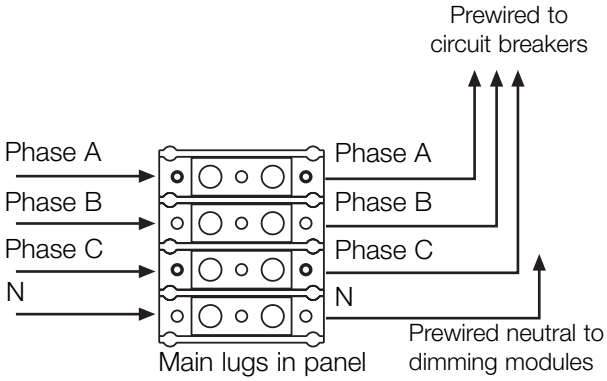

Main Lugs feed wiring gauge: #2/0 AWG (70 mm^2)

Mini Panel Breaker Wiring (all voltages)

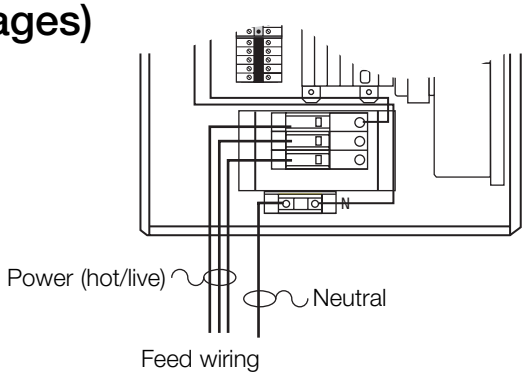

Dimming Panels Isolation Switch (230/220-240 V~)

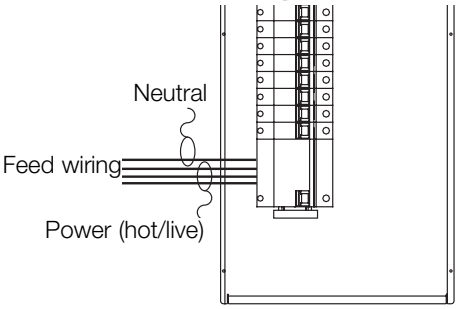

LUTRON®

Panel with Main Lugs: Load Wiring

Typical Dimming/Switching Leg Shown

4-Circuit Dimming Module (4U)
4-Circuit Adaptive Dimming Module (4A)
4-Circuit ELV Dimming Module
(4E: 230 V~ and 220-240 V~ only)
4-Circuit Fan Speed Control Module (4FSQ)

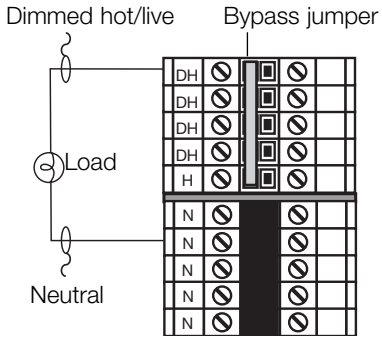

Caution! Do not remove bypass jumpers until after load wiring has been verified.

4-Circuit Motor Module (4M)

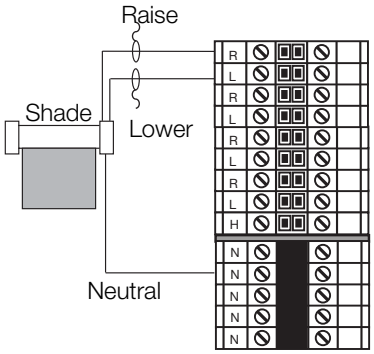

4-Circuit Switching Module (XP)

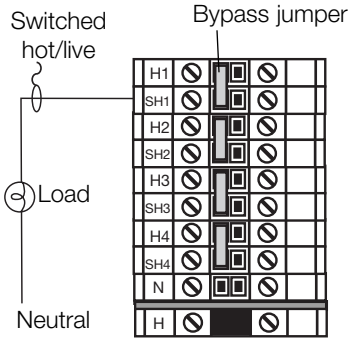

2-Circuit Dimming Module (2U)
(LCP only)

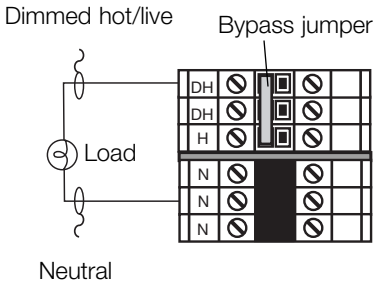

1-Circuit Dimming Module (1U)
(LCP only)

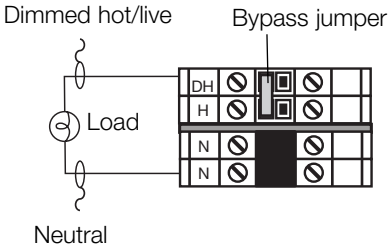

Load Wiring for TVM Module

For 0-10 V, PWM, and Tridonic® DSI loads. Each TVM controls two consecutive circuits of lighting and are the first circuits in the panel. Maximum low-voltage ballast control current:
50 mA per zone, 750 mA per panel.

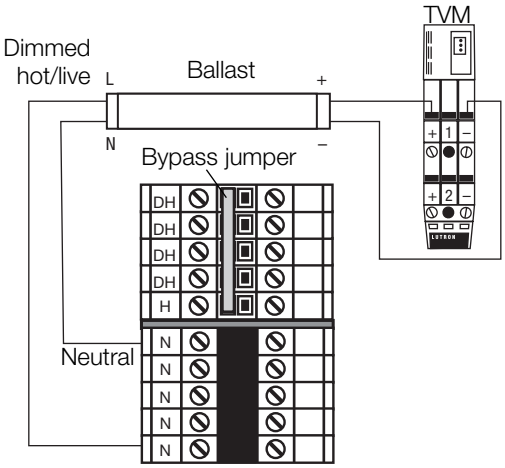

Connecting an NGRX-FDBI to a Panel

For Hi-Lume® FDB or Eco-10™ Fluorescent Dimming Ballast

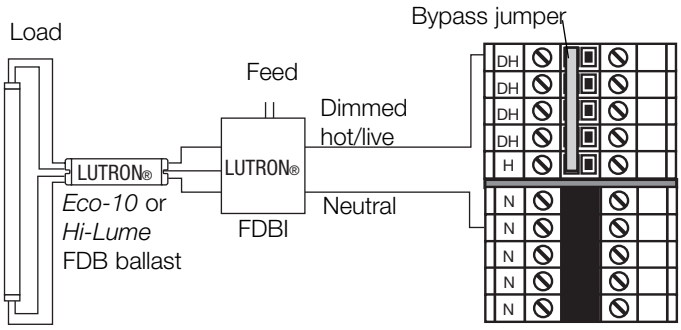

Activate Loads in Bypass

A. Complete load wiring.

B. Check that the bypass jumpers are in place.
These jumpers protect from load faults and must be used to check load wiring when it is installed or modified.

Caution! Verify that the panel is fed from the correct voltage. A feed miswire or loss of a feed neutral can cause damage to the equipment.

C. Turn circuit breaker 1 ON.
The load(s) should energize, the breaker should not trip, and total load current must be within the circuit breaker's limit and less than or equivalent to 16 A.
Circuit breaker 1 powers the control wiring as well as Circuit 1's dimmer and load(s). Check that the Power OK LED on the Controller (*LCP128*) or circuit selector (LP or CCP) is ON. If the Power OK LED is OFF, turn OFF the control circuit breaker (breaker 1) and check for a miswire on the low voltage link.

D. Turn next circuit breaker ON.
The load should energize, the breaker should not trip, and total load current must be within the circuit breaker's limit and less than or equal to 16 A.

E. Repeat step D for each circuit with completed load wiring.

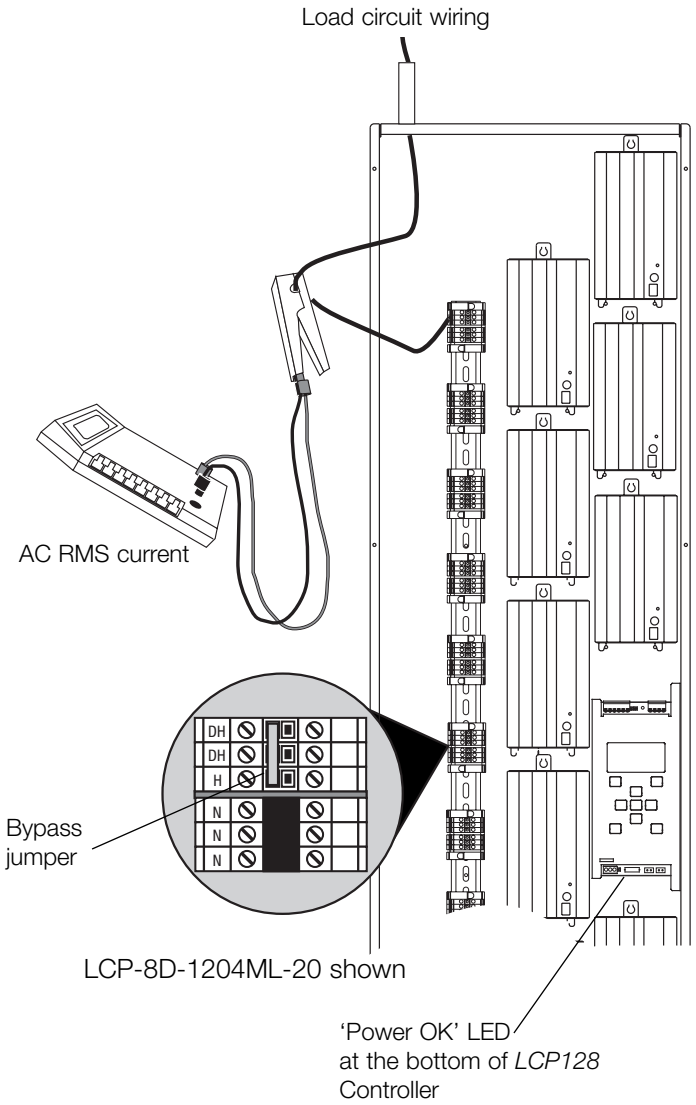

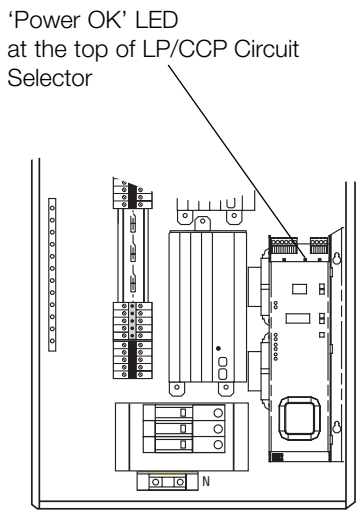

LP3/12-1204ML-20 shown

Complete Installation

You have completed your panel installation.

For Onsite Factory Commissioning, call Lutron Technical Support and select Startup to schedule a field service visit. Allow for 10 working days between day of call and scheduled visit.

If you purchased Telephone Startup (*LCP128* only), stop here and complete the Control Location, Panel, and Control Station Tables that are located in the back of the *Setup and Operation*. Once the tables are complete, call Lutron Technical Support and select Startup. Please call 24 hours prior to desired system startup.

In the U.S., Canada, and the Caribbean: 1.800.523.9466
In Mexico: +1.888.235.2910
In Europe: +44.207.702.0657
In Asia: +65.6220.4666
In Japan: +81.355.758.411
In all other countries: +1.610.282.6701

Remove Bypass Jumpers

A. After all load wiring has been checked, turn circuit breakers OFF.

B. Remove and store the bypass jumpers for possible future use.

C. Turn circuit breakers ON.

Note. All circuits are now set to the default Non-Dim load type. Non-Dim load types will respond by immediately going to full ON in any lighting scene (except the OFF scene).

Caution! Reuse the bypass jumpers whenever work is being done on a load. Damage caused by short-circuits and miswiring is not covered by the product warranty.

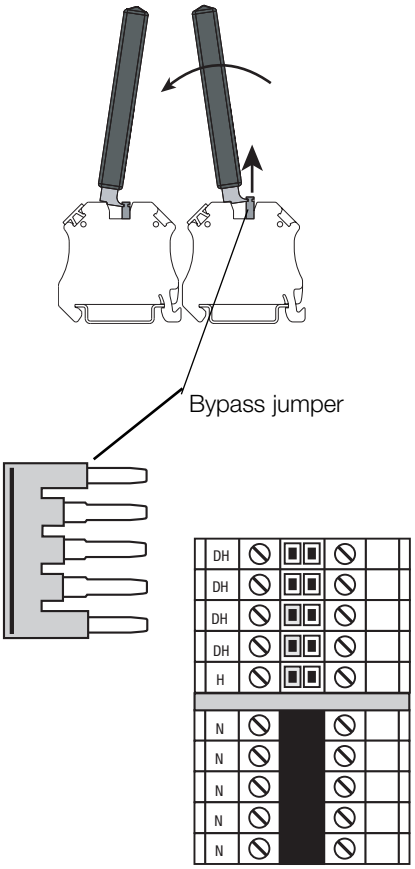

Module with 4 outputs shown

Panel installation, control station wiring, and load activation are now complete.
Next Step: Refer to the *Setup and Operation Manual* to set up the functions and operation of the panel.

Notes

Warranty

Lutron Electronics Co., Inc.
One Year Limited Warranty

For a period of one year from the date of purchase, and subject to the exclusions and restrictions described below, Lutron warrants each new unit to be free from manufacturing defects. Lutron will, at its option, either repair the defective unit or issue a credit equal to the purchase price of the defective unit to the Customer against the purchase price of comparable replacement part purchased from Lutron. Replacements for the unit provided by Lutron or, at its sole discretion, an approved vendor may be new, used, repaired, reconditioned, and/or made by a different manufacturer.

If the unit is commissioned by Lutron or a Lutron approved third party as part of a Lutron commissioned lighting control system, the term of this warranty will be extended, and any credits against the cost of replacement parts will be prorated, in accordance with the warranty issued with the commissioned system, except that the term of the unit's warranty term will be measured from the date of its commissioning.

EXCLUSIONS AND RESTRICTIONS

This Warranty does not cover, and Lutron and its suppliers are not responsible for:

1. Damage, malfunction or inoperability diagnosed by Lutron or a Lutron approved third party as caused by normal wear and tear, abuse, misuse, incorrect installation, neglect, accident, interference or environmental factors, such as (a) use of incorrect line voltages, fuses or circuit breakers; (b) failure to install, maintain and operate the unit pursuant to the operating instructions provided by Lutron and the applicable provisions of the National Electrical Code and of the Safety Standards of Underwriter's Laboratories; (c) use of incompatible devices or accessories; (d) improper or insufficient ventilation; (e) unauthorized repairs or adjustments; (f) vandalism; or (g) an act of God, such as fire, lightning, flooding, tornado, earthquake, hurricane or other problems beyond Lutron's control.
2. On-site labor costs to diagnose issues with, and to remove, repair, replace, adjust, reinstall and/or reprogram the unit or any of its components.
3. Equipment and parts external to the unit, including those sold or supplied by Lutron (which may be covered by a separate warranty).
4. The cost of repairing or replacing other property that is damaged when the unit does not work properly, even if the damage was caused by the unit.

EXCEPT AS EXPRESSLY PROVIDED IN THIS WARRANTY, THERE ARE NO EXPRESS OR IMPLIED WARRANTIES OF ANY TYPE, INCLUDING ANY IMPLIED WARRANTIES OF FITNESS FOR A PARTICULAR PURPOSE OR MERCHANTABILITY. LUTRON DOES NOT WARRANT THAT THE UNIT WILL OPERATE WITHOUT INTERRUPTION OR BE ERROR FREE.

NO LUTRON AGENT, EMPLOYEE OR REPRESENTATIVE HAS ANY AUTHORITY TO BIND LUTRON TO ANY AFFIRMATION, REPRESENTATION OR WARRANTY CONCERNING THE UNIT. UNLESS AN AFFIRMATION, REPRESENTATION OR WARRANTY MADE BY AN AGENT, EMPLOYEE OR REPRESENTATIVE IS SPECIFICALLY INCLUDED HEREIN, OR IN STANDARD PRINTED MATERIALS PROVIDED BY LUTRON, IT DOES NOT FORM A PART OF THE BASIS OF ANY BARGAIN BETWEEN LUTRON AND CUSTOMER AND WILL NOT IN ANY WAY BE ENFORCEABLE BY CUSTOMER.

IN NO EVENT WILL LUTRON OR ANY OTHER PARTY BE LIABLE FOR EXEMPLARY, CONSEQUENTIAL, INCIDENTAL OR SPECIAL DAMAGES (INCLUDING, BUT NOT LIMITED TO, DAMAGES FOR LOSS OF PROFITS, CONFIDENTIAL OR OTHER INFORMATION, OR PRIVACY; BUSINESS INTERRUPTION; PERSONAL INJURY; FAILURE TO MEET ANY DUTY, INCLUDING OF GOOD FAITH OR OF REASONABLE CARE; NEGLIGENCE, OR ANY OTHER PECUNIARY OR OTHER LOSS WHATSOEVER), NOR FOR ANY REPAIR WORK UNDERTAKEN WITHOUT LUTRON'S WRITTEN CONSENT ARISING OUT OF OR IN ANY WAY RELATED TO THE INSTALLATION, DEINSTALLATION, USE OF OR INABILITY TO USE THE UNIT OR OTHERWISE UNDER OR IN CONNECTION WITH ANY PROVISION OF THIS WARRANTY, OR ANY AGREEMENT INCORPORATING THIS WARRANTY, EVEN IN THE EVENT OF THE FAULT, TORT (INCLUDING NEGLIGENCE), STRICT LIABILITY, BREACH OF CONTRACT OR BREACH OF WARRANTY OF LUTRON OR ANY SUPPLIER, AND EVEN IF LUTRON OR ANY OTHER PARTY WAS ADVISED OF THE POSSIBILITY OF SUCH DAMAGES.

NOTWITHSTANDING ANY DAMAGES THAT CUSTOMER MIGHT INCUR FOR ANY REASON WHATSOEVER (INCLUDING, WITHOUT LIMITATION, ALL DIRECT DAMAGES AND ALL DAMAGES LISTED ABOVE), THE ENTIRE LIABILITY OF LUTRON AND OF ALL OTHER PARTIES UNDER THIS WARRANTY ON ANY CLAIM FOR DAMAGES ARISING OUT OF OR IN CONNECTION WITH THE MANUFACTURE, SALE, INSTALLATION, DELIVERY, USE, REPAIR, OR REPLACEMENT OF THE UNIT, OR ANY AGREEMENT INCORPORATING THIS WARRANTY, AND CUSTOMER'S SOLE REMEDY FOR THE FOREGOING, WILL BE LIMITED TO THE AMOUNT PAID TO LUTRON BY CUSTOMER FOR THE UNIT. THE FOREGOING LIMITATIONS, EXCLUSIONS AND DISCLAIMERS WILL APPLY TO THE MAXIMUM EXTENT ALLOWED BY APPLICABLE LAW, EVEN IF ANY REMEDY FAILS ITS ESSENTIAL PURPOSE.

TO MAKE A WARRANTY CLAIM

To make a warranty claim, promptly notify Lutron within the warranty period described above by calling the Lutron Technical Support Center at (800) 523-9466. Lutron, in its sole discretion, will determine what action, if any, is required under this warranty. To better enable Lutron to address a warranty claim, have the unit's serial and model numbers available when making the call. If Lutron, in its sole discretion, determines that an on-site visit or other remedial action is necessary, Lutron may send a Lutron Services Co. representative or coordinate the dispatch of a representative from a Lutron approved vendor to Customer's site, and/or coordinate a warranty service call between Customer and a Lutron approved vendor.

This warranty gives you specific legal rights, and you may also have other rights which vary from state to state. Some states do not allow limitations on how long an implied warranty lasts, so the above limitation may not apply to you. Some states do not allow the exclusion or limitation of incidental or consequential damages, so the above limitation or exclusion may not apply to you.

These products may be covered under one or more of the following U.S. patents: 5,309,068; 5,633,540; 6,046,550; 6,091,205; 6,188,181; 6,380,692; and corresponding foreign patents.

Contact Information

Internet: www.lutron.com
E-mail: product@lutron.com

WORLD HEADQUARTERS
USA
Lutron Electronics Co., Inc.
7200 Suter Road, Coopersburg, PA 18036-1299
TEL +1.610.282.3800
FAX +1.610.282.1243
Toll-Free 1.888.LUTRON1
Technical Support 1.800.523.9466

Brazil
Lutron BZ do Brasil Ltda.
AV, Brasil, 239, Jardim America
Sao Paulo-SP, CEP: 01431-000, Brazil
TEL +55.11.3885.5152
FAX +55.11.3887.7138

North and South America Technical Hotlines
USA, Canada, Caribbean: 1.800.523.9466
Mexico: +1.888.235.2910
Central/South America: +1.610.282.6701

EUROPEAN HEADQUARTERS
United Kingdom
Lutron EA Ltd.
6 Sovereign Close, London, E1W 3JF United Kingdom
TEL +44.(0)20.7702.0657
FAX +44.(0)20.7480.6899
FREEPHONE (UK) 0800.282.107
Technical support +44.(0)20.7680.4481

France
Lutron LTC, S.A.R.L.
90 rue de Villiers, 92300 Levallois-Perret France
TEL +33.(0)1.41.05.42.80
FAX +33.(0)1.41.05.01.80
FREEPHONE 0800.90.12.18

Germany
Lutron Electronics GmbH, Landsberger Allee 201, 13055 Berlin, Germany
TEL +49.(0)30.9710.4590
FAX +49.(0)30.9710.4591
FREEPHONE 00800.5887.6635

Italy
Lutron LDV, S.r.l.
FREEPHONE 800.979.208

Spain, Barcelona
Lutron CC, S.R.L.
Gran Via del Carlos III, 84, planta 3ª,
08028, Barcelona, Spain
TEL +34.93.496.57.42
FAX +34.93.496.57.01
FREEPHONE 0900.948.944

Spain, Madrid
Lutron CC, S.R.L.
Calle Orense, 85, 28020 Madrid, Spain
TEL +34.91.567.84.79
FAX +34.91.567.84.78
FREEPHONE 0900.948.944

ASIAN HEADQUARTERS
Singapore
Lutron GL Ltd.
15 Hoe Chiang Road, #07-03 Euro Asia Centre, Singapore 089316
TEL +65.6220.4666
FAX +65.6220.4333

China, Beijing
Lutron GL Ltd. Beijing Representative Office
5th Floor, China Life Tower
No. 16 Chaowai Street, Chaoyang District, Beijing 100020 China
TEL +86.10.5877.1817
FAX +86.10.5877.1816

China, Guangzhou
Lutron GL Ltd. Guangzhou Representative Office
Suite A09, 23/F Tower A, Centre Plaza
161 Lin He Xi Lu, Tian He District, Guangzhou 510620 China
TEL +86.20.2885.8266
FAX +86.20.2885.8366

China, Shanghai
Lutron GL Ltd., Shanghai Representative Office
Suite 07, 39th Floor, Plaza 66
1266 Nan Jing West Road, Shanghai, 200040 China
TEL +86.21.6288.1473
FAX +86.21.6288.1751

China, Hong Kong
Lutron GL Ltd.
Unit 2808, 28/F, 248 Queen's Road East
Wanchai, Hong Kong
TEL +852.2104.7733
FAX +852.2104.7633

Japan
Lutron Asuka Co. Ltd.
No. 16 Kowa Building, 4F, 1-9-20
Akasaka, Minato-ku, Tokyo 107-0052 Japan
TEL +81.3.5575.8411
FAX +81.3.5575.8420
FREEPHONE 0120.083.417

Asia Technical Hotlines
Northern China: 10.800.712.1536
Southern China: 10.800.120.1536
Hong Kong: 800.901.849
Japan: +81.3.5575.8411
Singapore: 800.120.4491
Taiwan: 00.801.137.737
Thailand: 001.800.120.665853
Other countries: +800.120.4491

Lutron Electronics Co., Inc.
Made and printed in U.S.A. 09/06
P/N 032-163 Rev. A

LUTRON®