ROLLER 64	4" FASCIA AND TOP BACK COVER - REGULAR ROLL

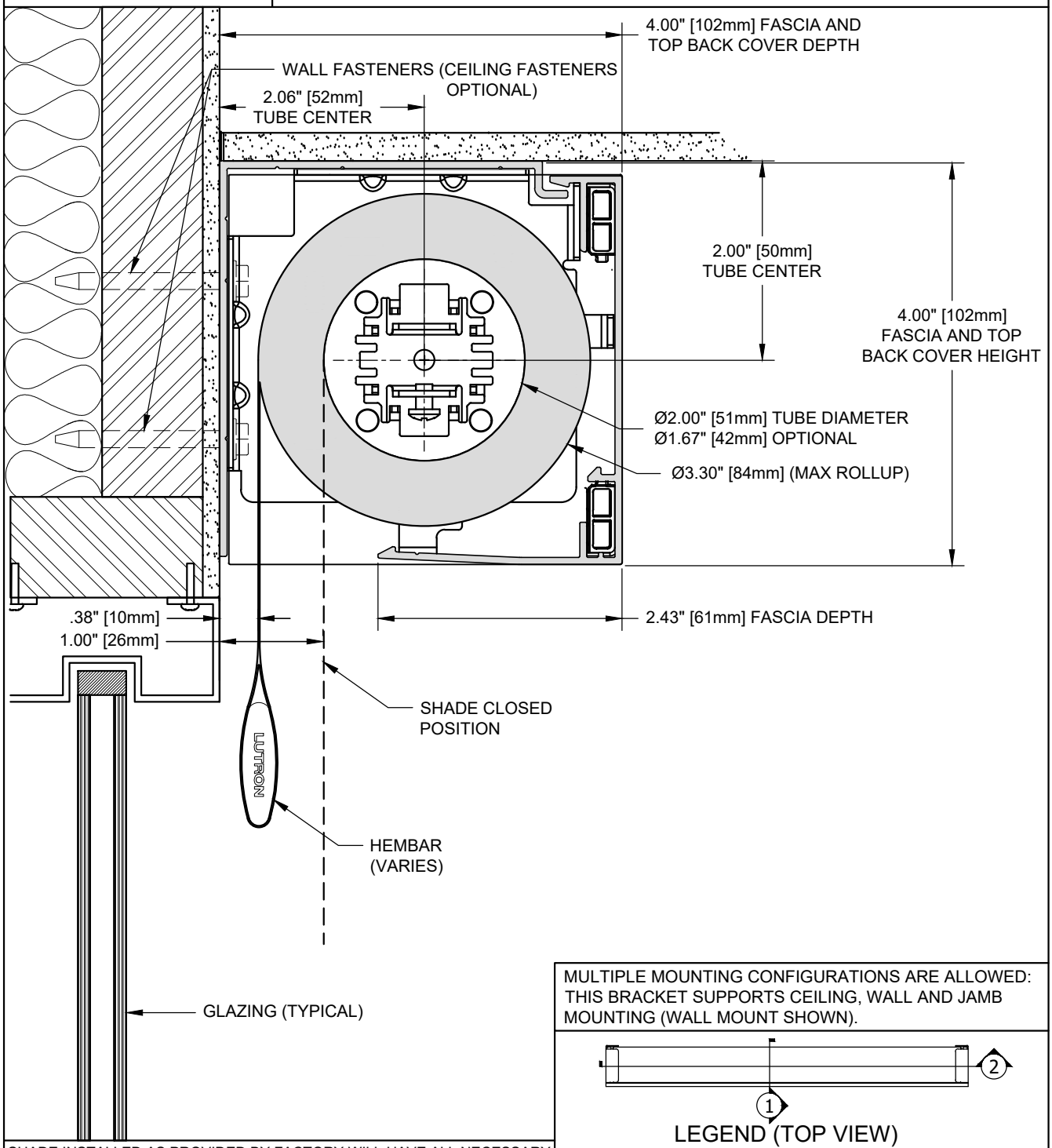

MULTIPLE MOUNTING CONFIGURATIONS ARE ALLOWED: THIS BRACKET SUPPORTS CEILING, WALL AND JAMB MOUNTING (WALL MOUNT SHOWN).

LEGEND (TOP VIEW)

SHADE INSTALLED AS PROVIDED BY FACTORY WILL HAVE ALL NECESSARY CLEARANCES FOR PROPER OPERATION. IF ADJUSTMENT FEATURES ARE UTILIZED, IT IS THE RESPONSIBILITY OF THE INSTALLER TO ENSURE PROPER CLEARANCES ARE MAINTAINED. NOT ALL ADJUSTMENTS ARE AVAILABLE AT MAXIMUM ROLL Ø.

ROLLER 64		085764
SCALE: 3/4	VIEW: 1	REVISION: A

LUTRON
Lutron Electronics Co., Inc.
7200 Suter Road I Coopersburg, PA 18036 I USA
1(800) 446-1503 I Fax: (610) 282-7439
http://www.lutron.com

SECTION VIEW