086123k 1 10.02.25

Drapery Track System for US and Canada

The Lutron drapery track utilizes the smooth and quiet precision controlled Electronic Drive Unit (EDU). It controls the movement of the drape, adjusting it to the user's desired positions.

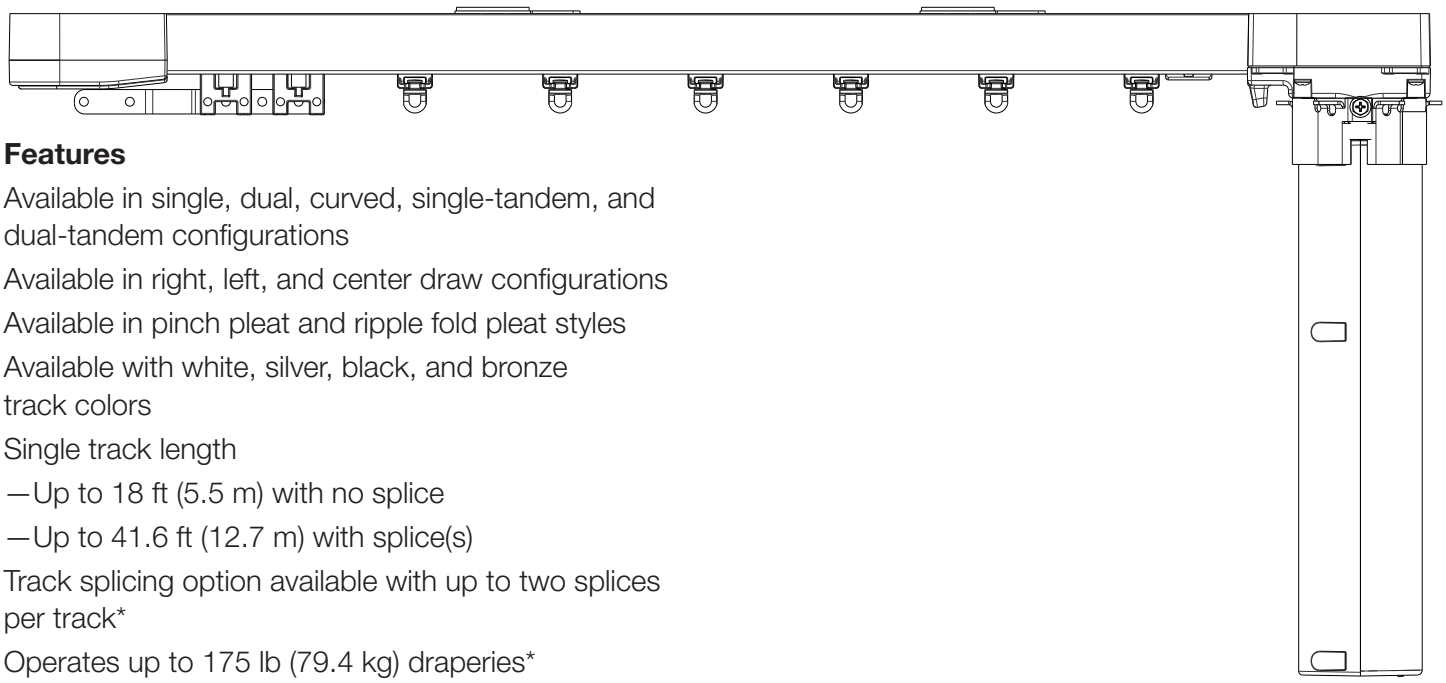

EDU in slim orientation with right draw, right drive, pinch pleat system shown

Features

- Available in single, dual, curved, single-tandem, and dual-tandem configurations
- Available in right, left, and center draw configurations
- Available in pinch pleat and ripple fold pleat styles
- Available with white, silver, black, and bronze track colors
- Single track length
  - —Up to 18 ft (5.5 m) with no splice
  - —Up to 41.6 ft (12.7 m) with splice(s)
- Track splicing option available with up to two splices per track*
- Operates up to 175 lb (79.4 kg) draperies*
- Pull-to-Start EDU allows for motorized operation with or without controls**
- Master carrier speed: 6 in/sec (152 mm/sec)
- Can be installed in new construction or retrofitable solution
- Smooth, quiet operation
- EDU can be installed in either slim orientation or original orientation. Slim orientation is recommended for ripple fold to provide a smaller first ripple around EDU
- Draperies start, move, and stop with precision
- Offers programmable stop points
- Pull-to-Start function available only with QSSC-EDU-D105-P
- Curtain system features an EDU that does not exceed 50 dB measured 3 ft (1 m) from EDU***

* See Capacity Specification Submittal for details: https://support.lutron.com/us/en/product/shades/component/drapery/sivoia-qs/documents/product-specification-submittals

** Manual open feature option available only with QSSC-EDU-D105-P. Manual open feature allows for manual opening of the drapery in the event of power loss.

*** Considerations for sound performance of the finished curtain track includes curtain style, carrier count, fabric weight, and installation.

LUTRON SPECIFICATION SUBMITTAL

Job Name:	Model Numbers:	
Job Number:		

086123k 2 10.02.25

Specifications

Power

- Operating voltage: Class 2, 35 V⎓

Compatible Power Sources

- Individual Plug-In Power Supply
  - —QSPS-P1-1-35V
  - —QSPS-P2-1-35V
  - —QSPS-P3-1-35V
  - —QSPS-P4-1-35V
- Individual Junction Box
  - —QSPS-J-1-35V
- 10-Output Power Panels
  - —QSPS-10PNL
  - —QSPSY-10PNL
- Configurable Power Panels
  - —QSPS-10PNL-NPM (with WIN-PS-5CC-R installed)
  - —QSPS-30PNL-NPM (with WIN-PS-5CC-R installed)

Environment

- Temperature: 32 °F - 104 °F (0 °C - 40 °C)
- For indoor use only
- Humidity: 0% - 90%, non-condensing

Controls

Sivoia QS

- seeTouch QS keypads
- GRAFIK Eye QS
- Pico Wireless Control (through QSM)
- HomeWorks QS
- HomeWorks QSX
- Quantum
- Athena
- myRoom Plus & myRoom XC

Sivoia QS Wireless (via Sivoia QS Wireless Receiver)

- Pico wireless control
- 4-Group RF shade remote control
- Caséta (Smart Hub PRO)
- Radio RA2
- RA2 Select
- RadioRA 3
- HomeWorks QS
- HomeWorks QSX
- myRoom Plus and myRoom XC

Job Name:	Model Numbers:	
Job Number:		

System Components (pinch pleat system shown)

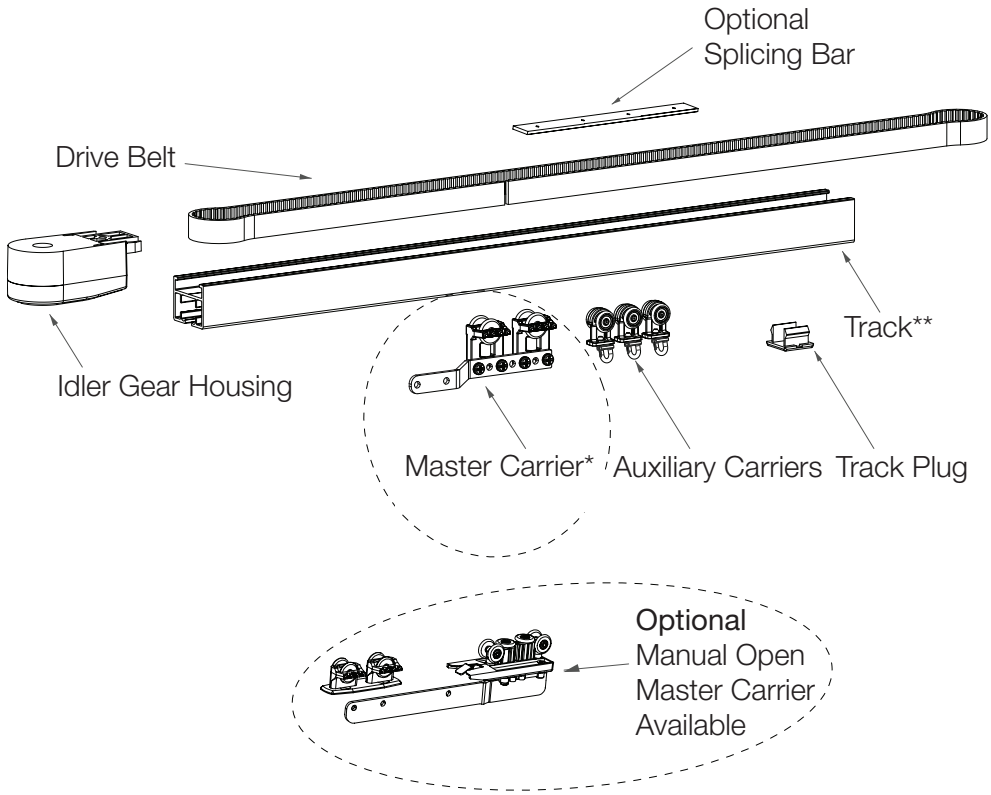

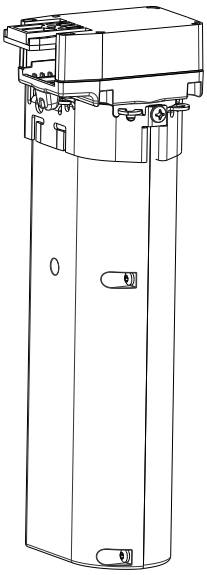

Drive with motor bracket attached, slim orientation***

* Additional master carrier options depicted on the following pages
** Track color options: White, Silver, Bronze, Black
*** EDU can be installed in either slim orientation or original orientation. Slim orientation is recommended for ripple fold to provide a smaller first ripple around EDU

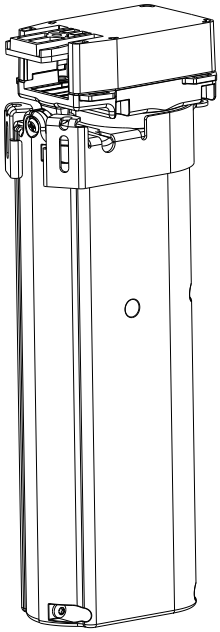

Drive with motor bracket attached, original orientation***

Job Name:	Model Numbers:	
Job Number:		

System Components (continued)

Pleat Type		Pinch Pleat		Ripple Fold	
Operation Method		Without Pull-to-Start	With Pull-to-Start	Without Pull-to-Start	With Pull-to-Start
Side Draw	Standard	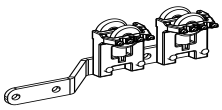 SQD-C-SLM (left draw) SQD-C-SRM (right draw)	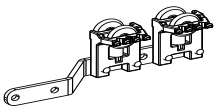 SQD-C-SLM (left draw) SQD-C-SRM (right draw)	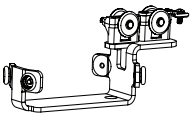 SQD-R-SDM	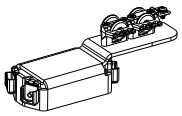 WIN-R-SD-PTS
	Extended	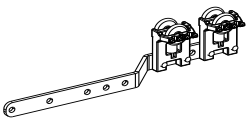 SQD-C-LLM (left draw) SQD-C-LRM (right draw)	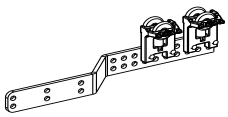 SQD-C-LDPTS (left draw) SQD-C-RDPTS (right draw)	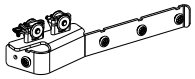 SQD-R-OCDM	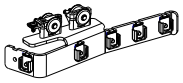 WIN-R-EXT-PTS (both left and right draw versions, only install one)
Center Draw	Butt-Closure	N/A	N/A	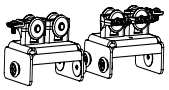 SQD-R-CDM	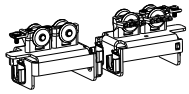 WIN-R-CDB-PTS
	Overlap	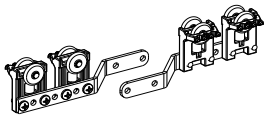 SQD-C-CDM (3.89 in (98.9 mm) overlap)	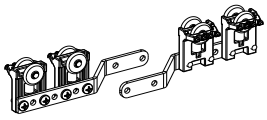 SQD-C-CDM (3.89 in (98.9 mm) overlap)	N/A	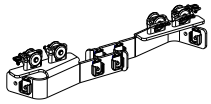 WIN-R-CDO-PTS (4.6 in (117 mm) overlap)
	Extended Overlap	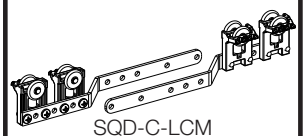 SQD-C-LCM (6.0 in (152 mm) overlap)	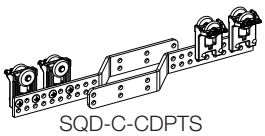 SQD-C-CDPTS (6.0 in (152 mm) overlap)	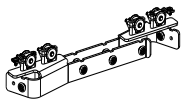 SQD-R-OCDM (7.0 in (177 mm) overlap)	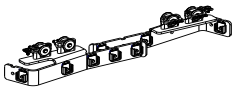 WIN-R-EXT-PTS (6.0 in (152 mm) overlap)
Tandem		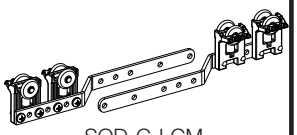 SQD-C-LCM (3.0 in (76 mm) overlap in tandem installation)	Pull-to-Start feature is not compatible with tandem installations	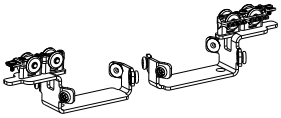 SQD-R-LCDM	Pull-to-Start feature is not compatible with tandem installations
End Brackets		Drive End Bracket: 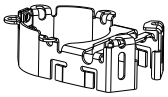 SQD-DRVBRK		Drive End Bracket: 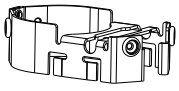 SQD-R-MB-6	Idler End Bracket: 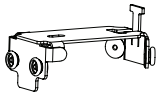 SQD-R-CDM-KIT6 (center draw only)*

*Kit includes pictured bracket and SQD-R-CDM

Job Name:	Model Numbers:	
Job Number:		

Straight Drapery Track Options (pinch pleat carriers shown)

Left Draw, left drive

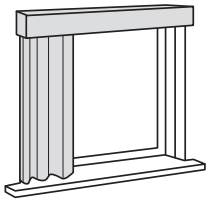

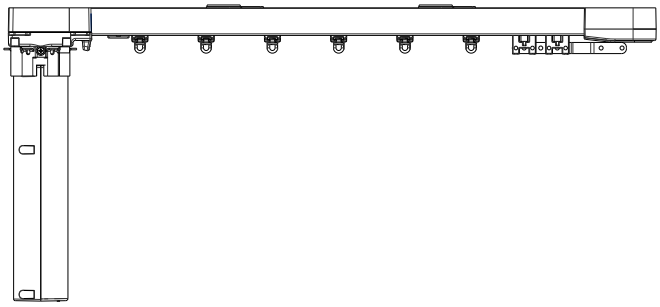

Right Draw, right drive

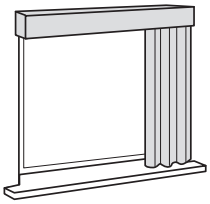

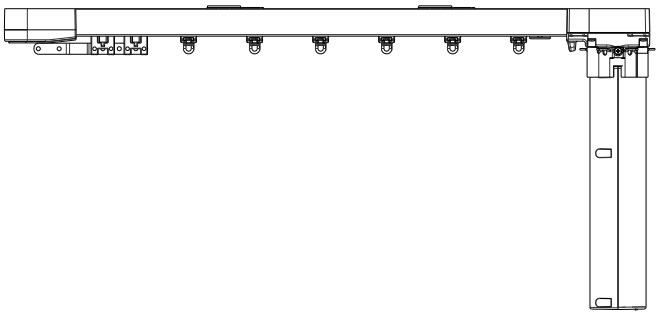

Center Draw, left or right drive (right drive shown)

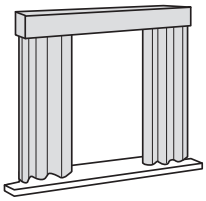

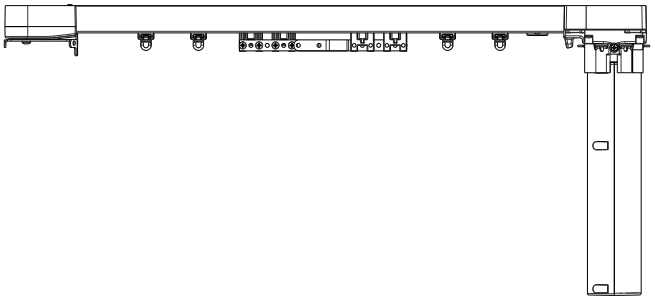

Tandem Draw, left and right drives

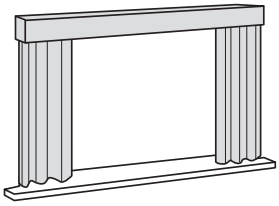

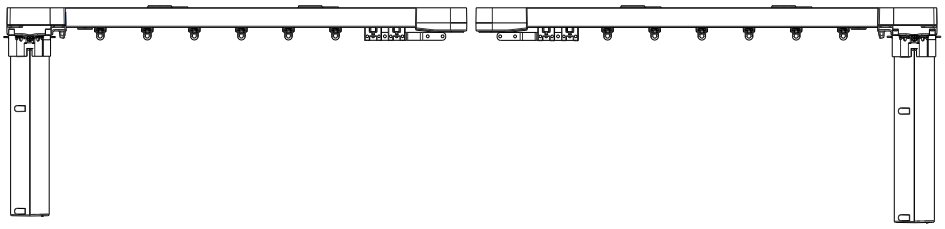

Note:
Valence and drapery fabric panel not included.

Job Name:	Model Numbers:	
Job Number:		

086123k 6 10.02.25

Standard Curved Drapery Track Options

Minimum Drive Leg Length (D) – 24 in (610 mm)

Minimum Idler Leg Length (B) – 24 in (610 mm)

One leg can be up to 72 in (1829 mm) while the other leg can be up to 144 in (3658 mm)

For assistance on curved track configurations with pull-to-start, please contact Lutron Customer Service

Left draw, left drive, inside curve

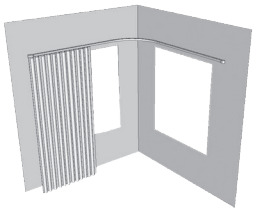

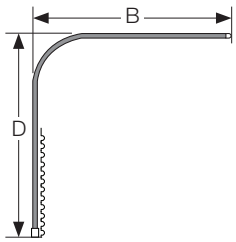

Left draw, left drive, outside curve

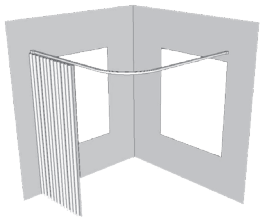

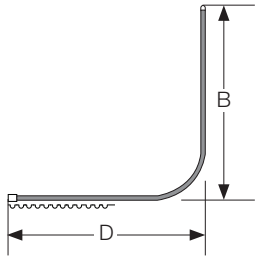

Right draw, right drive, inside curve

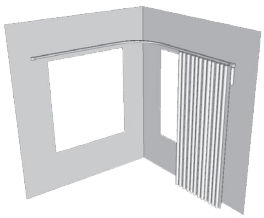

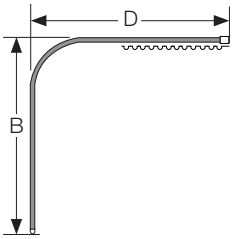

Right draw, right drive, outside curve

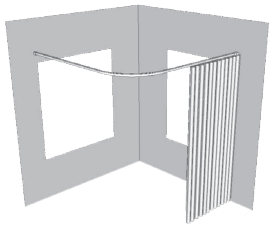

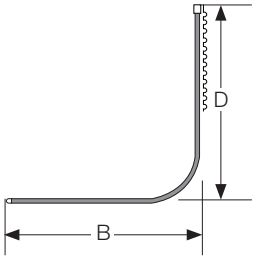

Center draw, left drive, inside curve

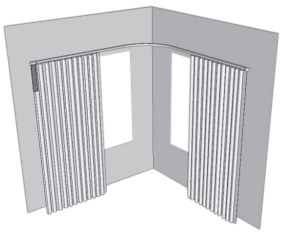

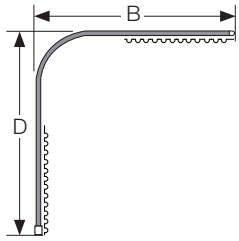

Center draw, left drive, outside curve

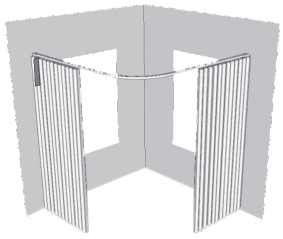

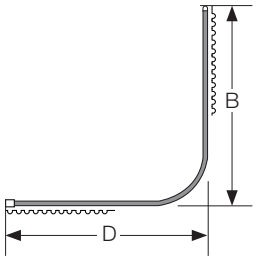

Center draw, right drive, inside curve

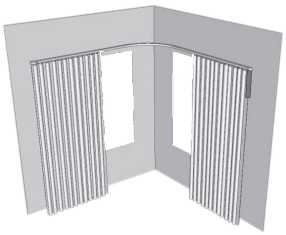

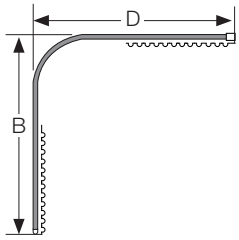

Center draw, right drive, outside curve

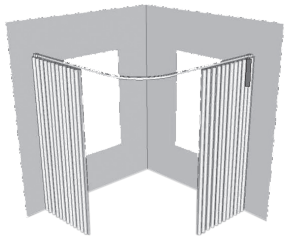

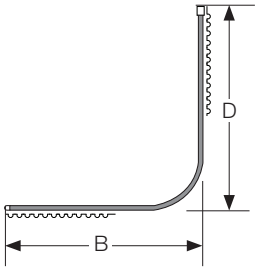

Job Name:	Model Numbers:	
Job Number:		

Standard Curved Drapery Track Options (continued)

Center draw, tandem (right and left drive), inside curve

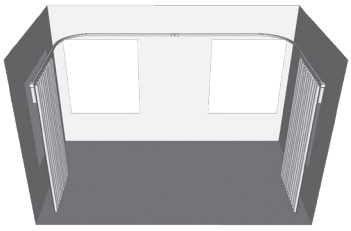

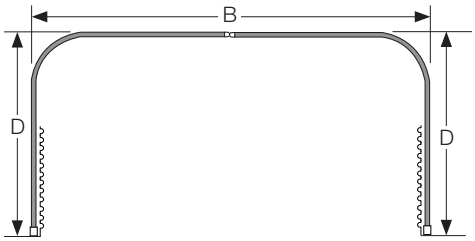

Center draw, tandem (right and left drive), outside curve

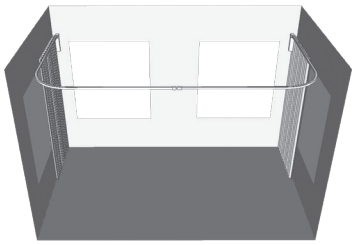

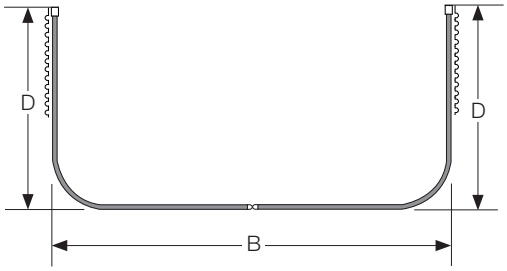

Note:
Dimension B and D do not include any wall offsets. When providing dimensions B and D, account for the wall offset to ensure the drapery track will fit properly in the desired location. The factory DOES NOT take any deductions from the provided dimensions. Refer to page 9 for recommended minimum offsets.

Job Name:	Model Numbers:	
Job Number:		

System Dimensions (slim orientation shown)

Top View (single track, right draw)

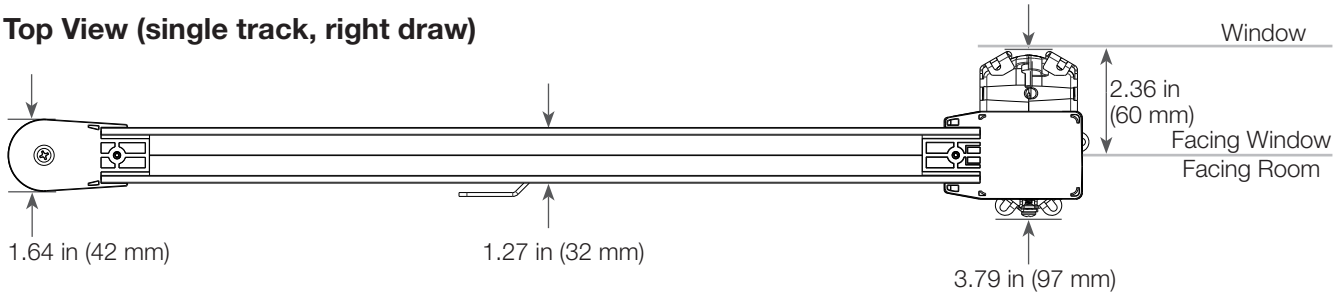

Front View (single track, right draw)

Track width 18 ft (5.5 m) max without splice
Up to 30 ft (9.1 m) with splice (two splice max)

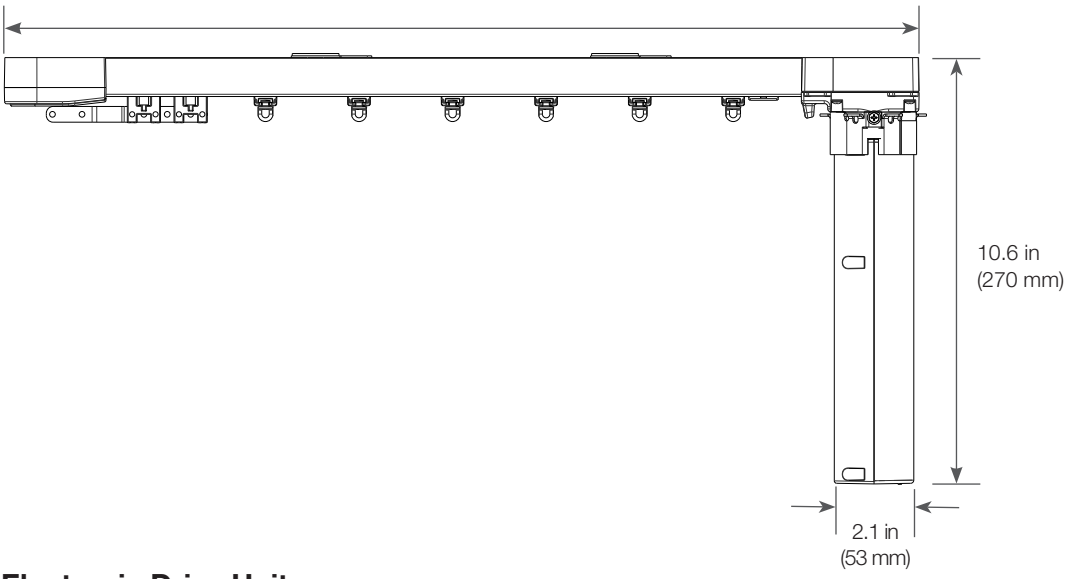

Electronic Drive Unit

1.9 lbs (0.9 kg)

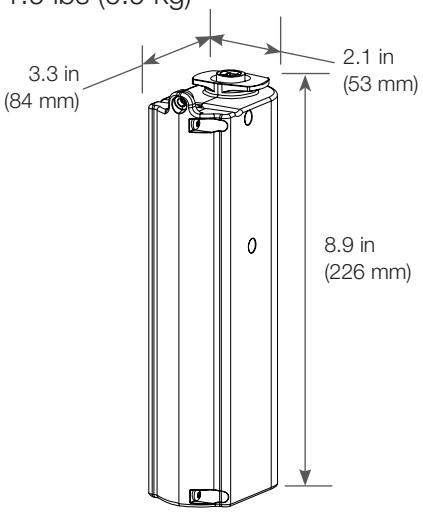

Job Name:	Model Numbers:	
Job Number:		

Single drapery track system

Maintain enough clearance between the drapery track and the inside face of the top treatment or ceiling recess to allow the fabric to move freely.

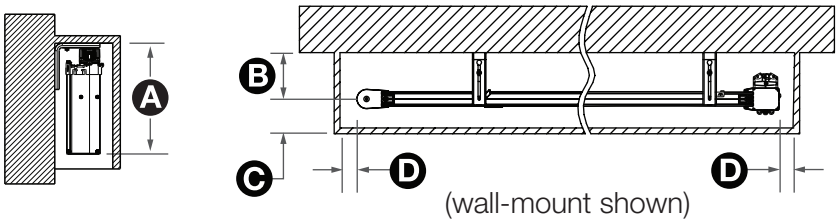

(wall-mount shown)

Minimum Dimensions

- A 11.25 in (286 mm)
- B 3.5 in (89 mm)
- C 2.5 in (64 mm)
- D 1 in (25 mm)

Dual drapery track system

Lutron drapery tracks can be used for a combination sheer/blackout treatment.

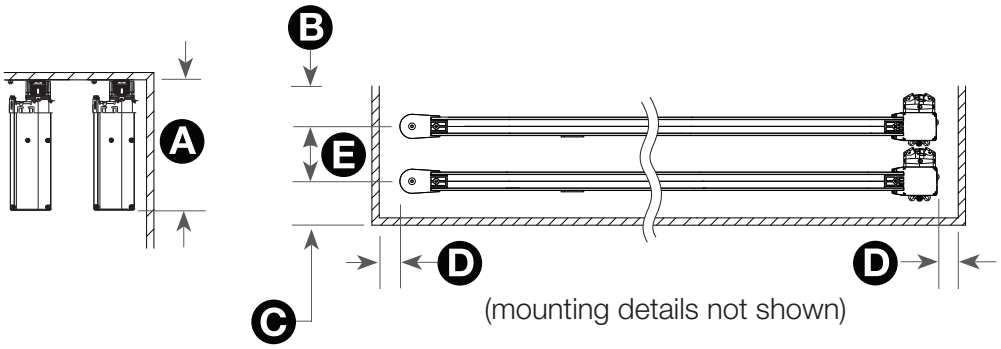

(mounting details not shown)

Minimum Dimensions

- A 11.25 in (286 mm)
- B 3.5 in (89 mm)
- C 2.5 in (64 mm)
- D 1 in (25 mm)
- E 5.5 in (140 mm)

Single, tandem drapery track system

The accuracy of movement and speed control of the Lutron drapery track system allows two independent systems to be used to create a center draw drape.

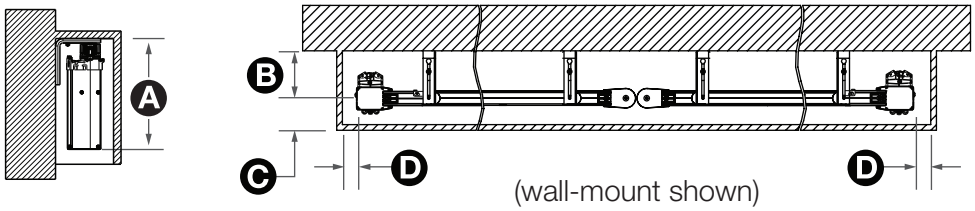

(wall-mount shown)

Minimum Dimensions

- A 11.25 in (286 mm)
- B 3.5 in (76 mm)
- C 2.5 in (64 mm)
- D 1 in (25 mm)

Corner application

Lutron drapery tracks can be used in corner applications.

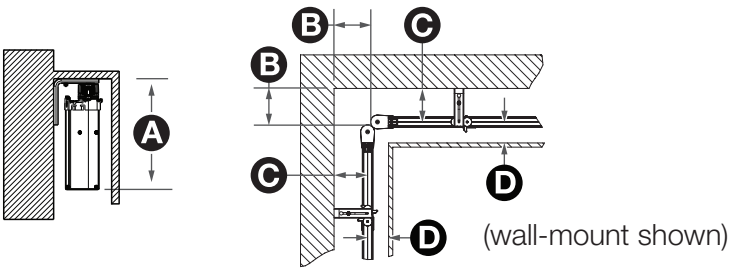

(wall-mount shown)

Minimum Dimensions

- A 11.25 in (286 mm)
- B 4.0 in (102 mm)
- C 3.5 in (76 mm)
- D 2.5 in (64 mm)

Job Name:	Model Numbers:	
Job Number:		

Bracket Options

Lutron drapery track is available in either wall-mount or ceiling-mount.

Ceiling bracket cam lock

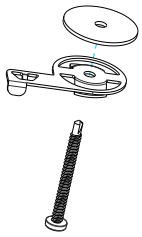

Ceiling-mount bracket

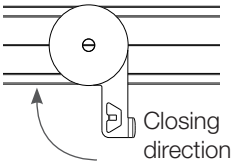

Top view of clip arm extended in unlocked position

Ceiling-mount application

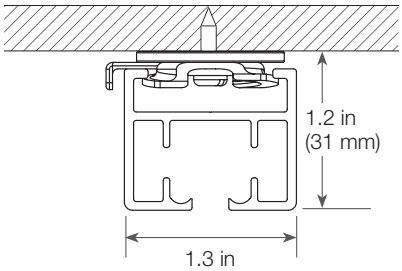

Pocket mount application

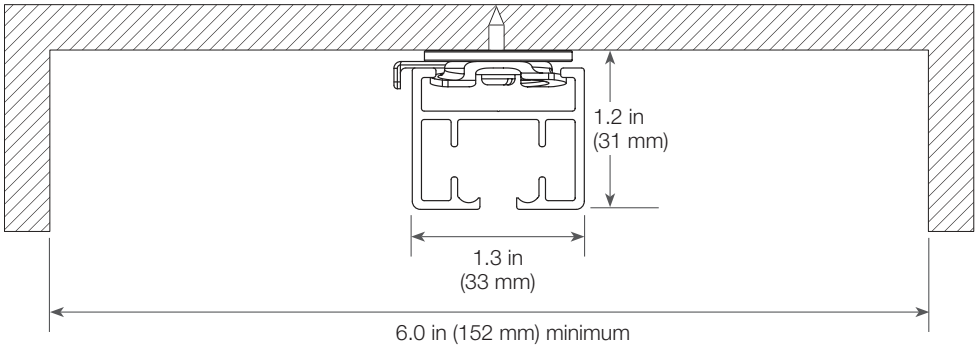

IMPORTANT: Each ceiling-mount cam-lock must be installed into a structural member using an appropriate fastener. Ensure the structural member is of sufficient strength to support the combined weight of the drapery track, EDU, and fabric.

If no appropriate structural member is available at the mounting location, it is the responsibility of the installer to add blocking as necessary to safely support the operating load of the system, including tugging that may occur during manual or attempted manual operation.

Cam Lock Spacing - Ceiling Mount

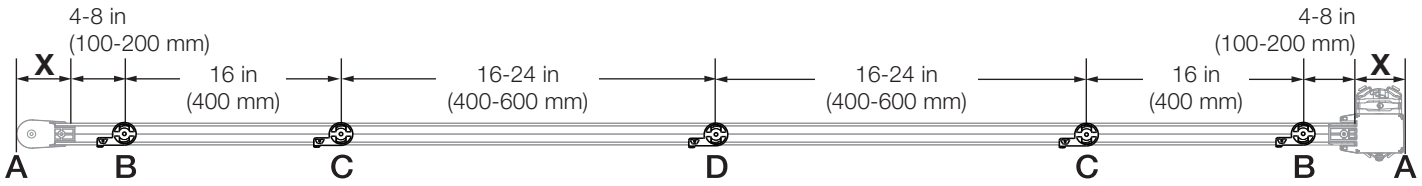

1. Mount a cam lock (**B**) within 4 in (100 mm) to 8 in (200 mm) of each end of the system (**A**).
2. Mount the next cam locks (**C**) 16 in (400 mm) inward from each end cam-lock (**B**).
3. Space the remaining cam locks (**D**) 16-24 in (406-610 mm) apart.
4. For non-sheer fabric panels, 16 in (406 mm) spacing is recommended between cam locks at stackback location(s).

Job Name:	Model Numbers:	
Job Number:		

Wall-Mount Bracket (wall-mount bracket matches track color)

Minimum Extension

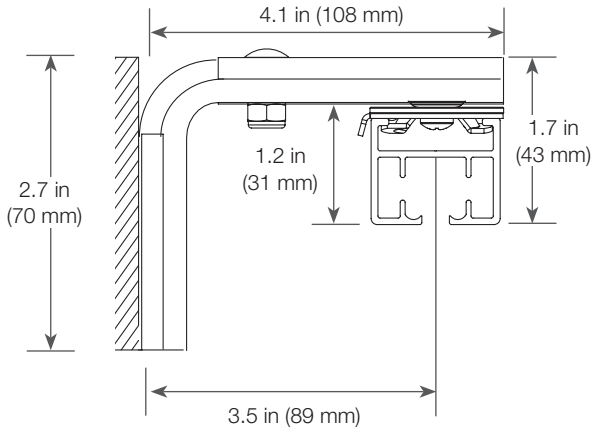

Maximum Extension

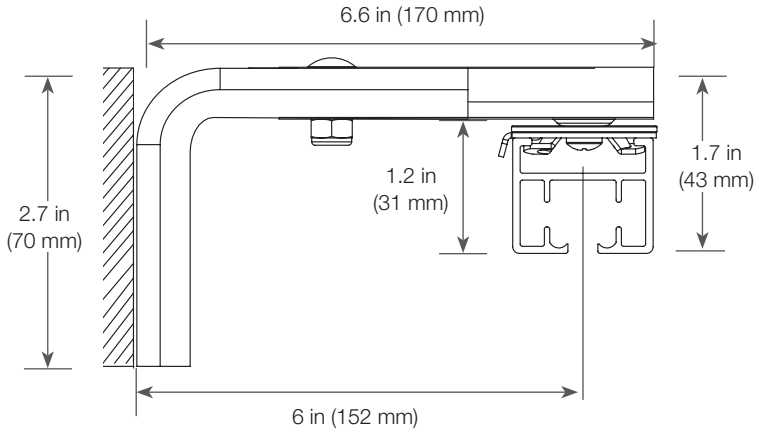

Wall-Mount Bracket

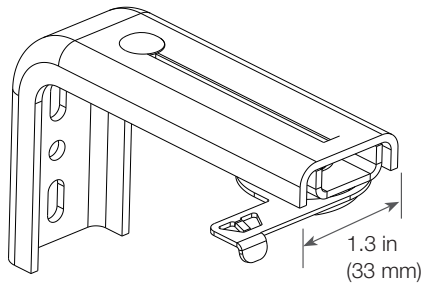

Job Name:	Model Numbers:	
Job Number:		

Dual Wall-Mount Bracket (dual wall-mount bracket matches track color)

Minimum Extension

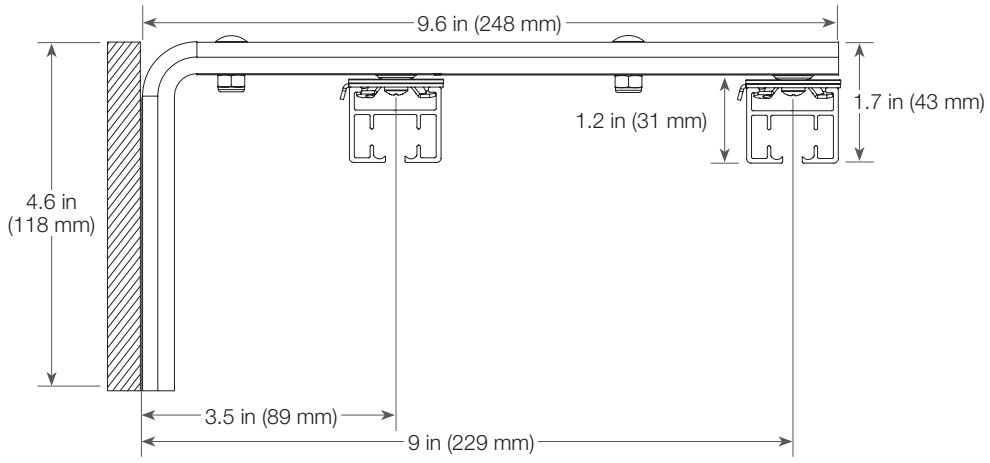

Maximum Extension

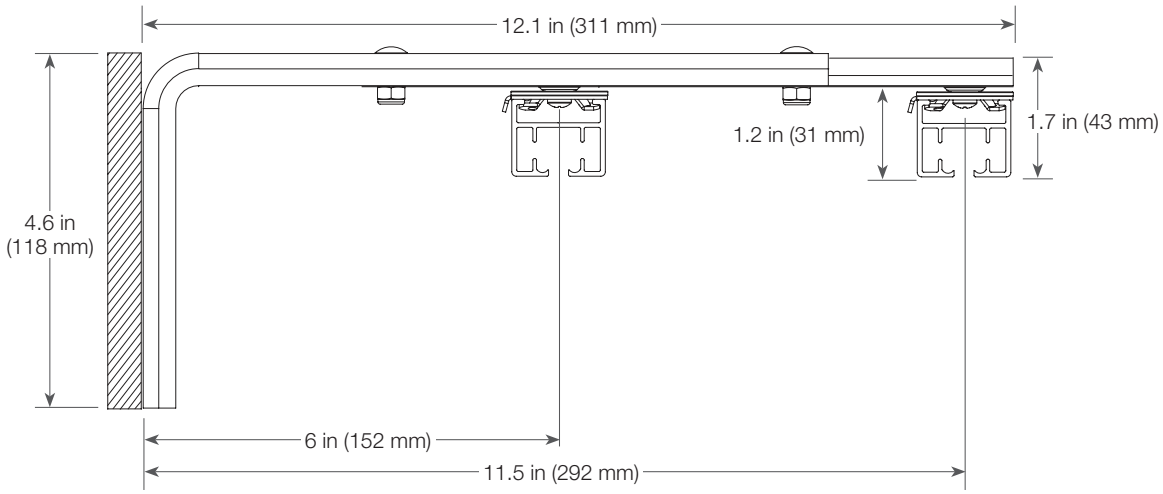

IMPORTANT: The drapery track must be level to operate properly, so all brackets must be aligned along a level horizontal line. Each wall-mount bracket must be installed into a wall stud or other structural member using appropriate fasteners. Ensure brackets are mounted firmly enough to support the combined weight of the drapery track, EDU, and fabric.

If no appropriate structural member is available at the mounting location, it is the responsibility of the installer to add blocking as necessary to safely support the operating load of the system, including tugging that may occur during manual or attempted manual operation.

Bracket Spacing

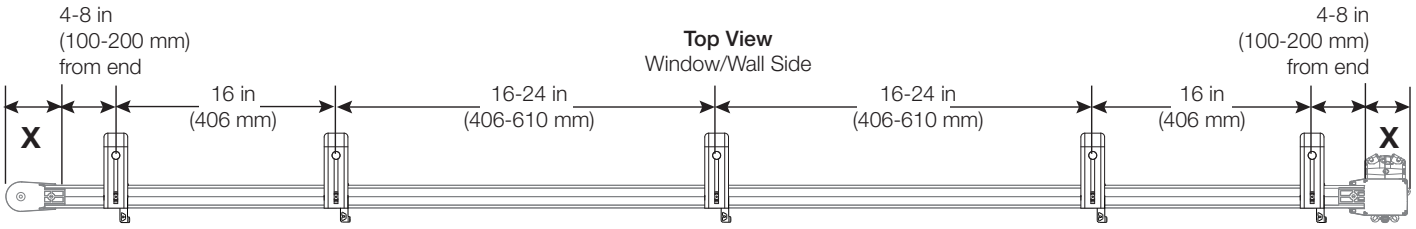

Job Name:	Model Numbers:	
Job Number:		

Recessed System

Features

- Mud-in flanges along the recessed system to be integrated flush with the ceiling
- Intended for 5/8 in (16 mm) double layer drywall*
- EDU and idler end caps are designed to fit the drapery track with a minimal 1/16 in (1.6 mm) reveal along the track
- Recessed pocket, 8 ft (2.4 m) in length, can be cut to size
- Tape measure slots on the end caps ensure proper fit
- Installation tool ensures the track is centered within the recessed system and protect the track paint during track installation
- Straight track only

* Refer to Application Note #843 (P/N 048843) for more details (https://assets.lutron.com/a/documents/048843.pdf)

View of Recessed Mounting Bracket:

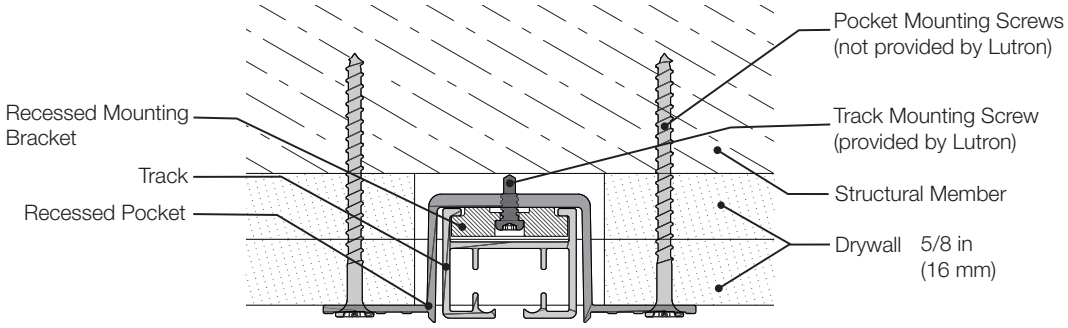

Model Number	Description
WIN-DREC-TRIM-3	Recessed pocket extrusion 8 ft (2.4 m), White, 3 pack
WIN-DREC-TRIM-WH	Recessed drapery pocket extrusion 8 ft (2.4 m), White
WIN-DREC-TOOL	Recessed drapery installation tool
WIN-DREC-ENDS	EDU and idler end caps kit
WSL-DREC-TRIM	Sample recessed drapery pocket extrusion 3 in (76.2 mm)
WSL-DREC-I	Sample recessed drapery idler end cap
WSL-DREC-D	Sample recessed drapery drive EDU end cap
WIN-DRBMS-10-RPL	Track mounting screws for recessed system, 10 pack

Job Name:	Model Numbers:	
Job Number:		

Recessed System (continued)

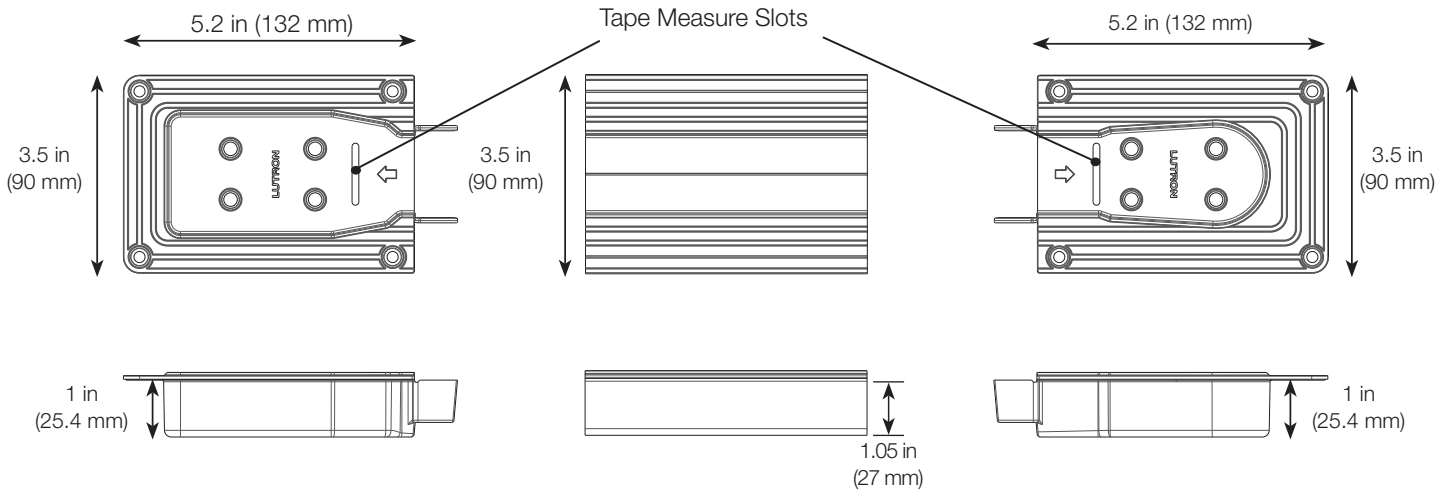

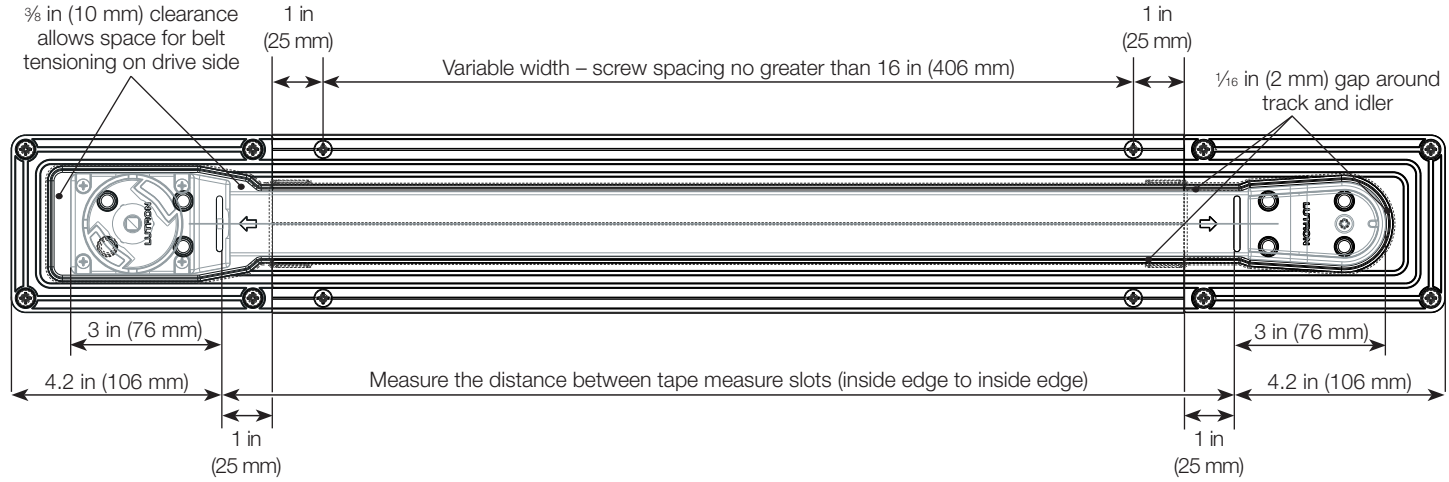

Sizing:

1. A consistent 1/16 in (2 mm) gap is around the idler and track. Fabric can be wrapped to cover the larger gap on the drive side to allow for expected variance in drapery system width.
2. Lutron recommends ordering the track after the pocket is installed. Once the pocket is installed, measurements of the pocket will account for variance in installation.
3. Track length = tape measure slot distance + 6 in (152 mm).
4. Recessed Pocket cut width = Ordered track width - 8 in (203 mm).
5. Recessed Pocket cut width = tape measure slot distance - 2 in (51 mm).

Mounting:

1. The recessed pocket must be mounted to structural members no further than every 16 in (406 mm).
2. All recessed pockets must be attached to at least two structural members.
3. The track is to be joined to the pocket using Lutron's recessed mounting bracket and the provided screws. A recessed mounting bracket must be installed at each predrilled mounting hole.

Job Name:	Model Numbers:	
Job Number:		

Recessed Mount Bracket

Mounting with wood screw

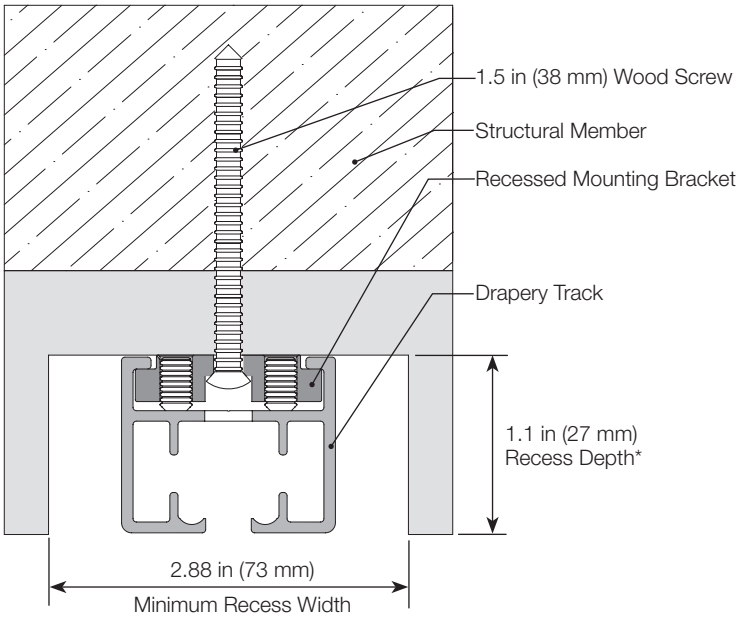

* Provides complete concealment of the track while maintaining proper clearance for the drapery fabric below the recess. A deeper recess will require additional width to clear the drapery fabric.

The track is predrilled with mounting holes, spaced as indicated below. A recessed mounting bracket must be installed at each predrilled mounting hole.

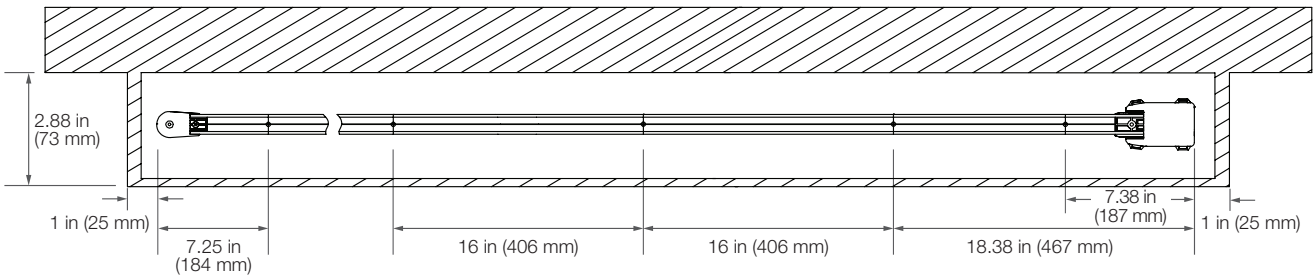

For curved tracks: It is recommended recessed pockets are built/finished after receiving the product to verify fit due to expected manufacturing tolerances for curved tracks.

Installations that violate these clearance recommendations have not been evaluated for installation and performance.

Job Name:	Model Numbers:	
Job Number:		

Splice (optional)

Track available with up to two splices

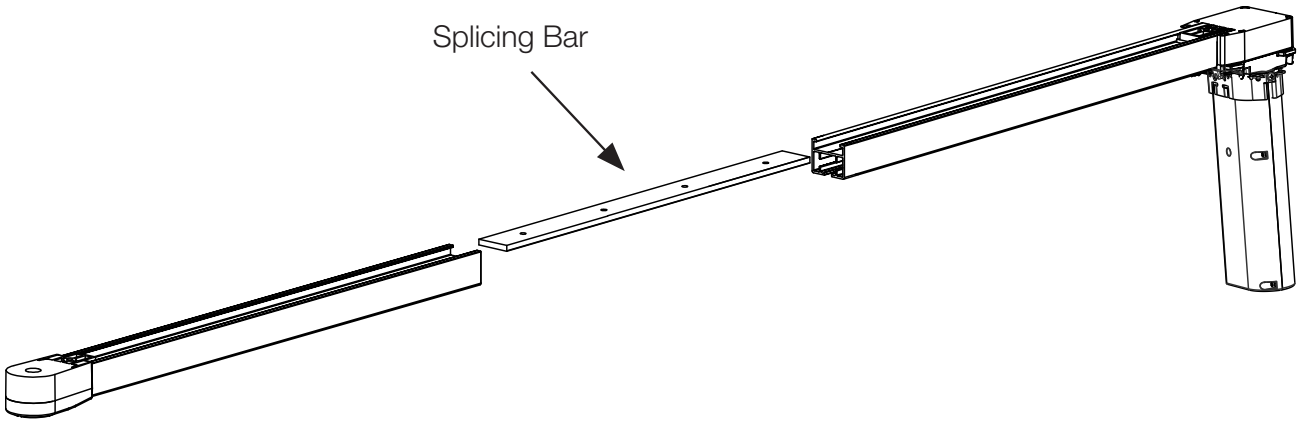

Track with one splice
Minimum Length: 72 in (1829 mm)
Maximum Length: 432 in (10972 mm)
Track provided in two equal sections

Track with two splices
Minimum Length: 144 1/16 in (3659 mm)
Maximum Length: 500 in (12700 mm)
Track provided in three equal sections

Note:

Pull-to-Start drapes are limited to one splice with center draw installations only. Non-Pull-to-Start drapes have additional splicing options detailed in the table below.

Draw Type	Splices	Pinch Pleat	Ripple Fold
One-Way Draw	0	Rubber Wheel	Plastic Wheel
	1	Plastic Wheel	Plastic Wheel
	2	Plastic Wheel	Plastic Wheel
Center Draw	0	Rubber Wheel	Plastic Wheel
	1	Rubber Wheel	Plastic Wheel
	2	Plastic Wheel	Plastic Wheel

Job Name:	Model Numbers:	
Job Number:		

Fabric Fullness

Generally, drapery "fullness" is the aesthetic result of adding more or less fabric to a given system width.

- Lower fullness results in smaller stackback size when open and more spread when closed.
- Higher fullness results in larger stackback size when open and less spread when closed.

Pinch Pleat Fabric Fullness

Pinch pleat drapery panels are offered in three fullness ratings:

- 3x: fabric panel width (before pleating) = track width x 3 (sheer fabrics only)
- 2.5x: fabric panel width (before pleating) = track width x 2.5
- 2x: fabric panel width (before pleating) = track width x 2

Note: Due to potential variations in final pleating, Lutron intentionally over-estimates the number of auxillary carriers provided with pinch pleat drapery track systems. Extra carriers may be included.

Job Name:	Model Numbers:	
Job Number:		

Pinch Pleat Configurations (without Pull-to-Start, slim orientation shown)

Center-draw system with standard master carriers

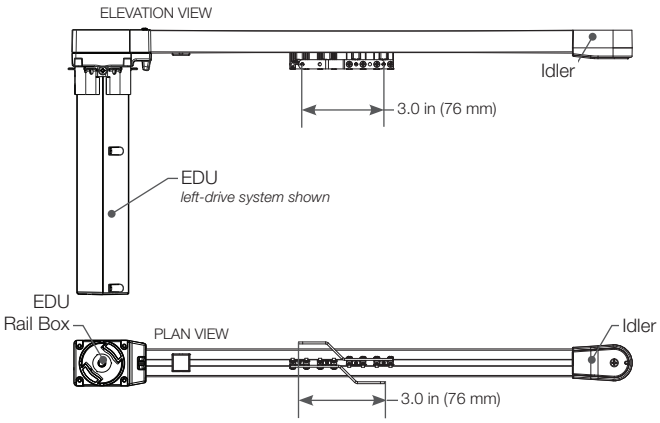

Center-draw system with extended master carriers

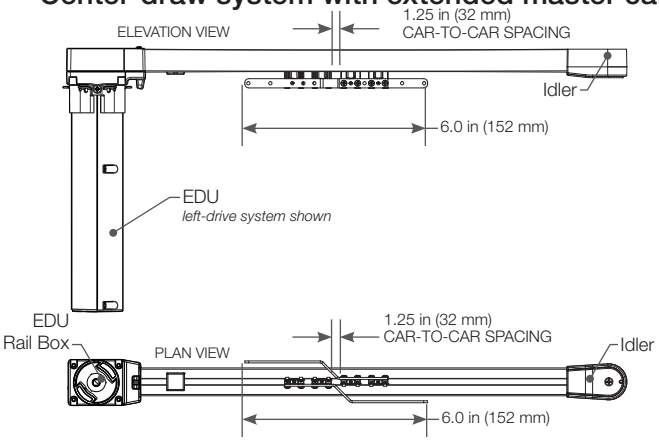

Tandem-draw system with extended master carriers

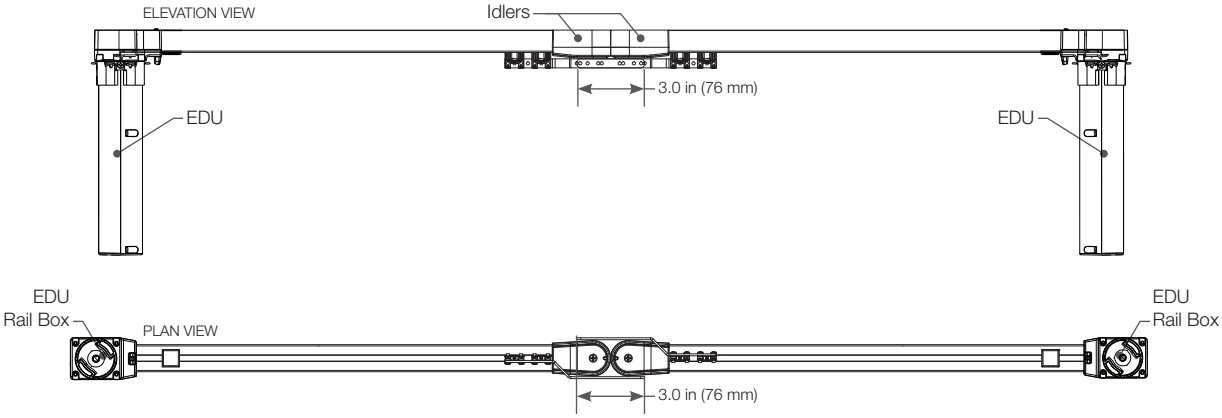

Pinch Pleat Configurations (with Pull-to-Start, slim orientation shown)

Center-draw system with standard master carriers

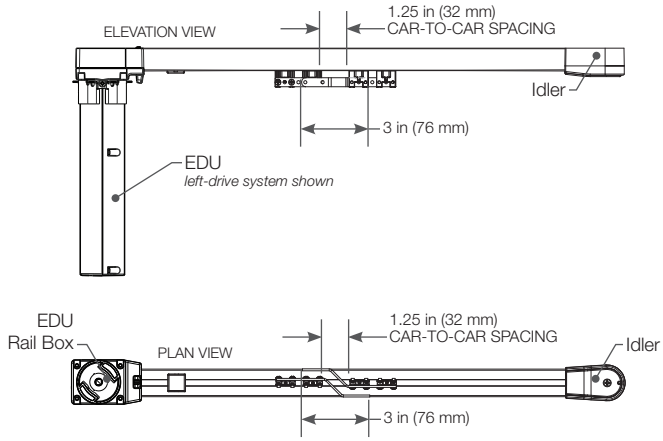

Center-draw system with extended master carriers

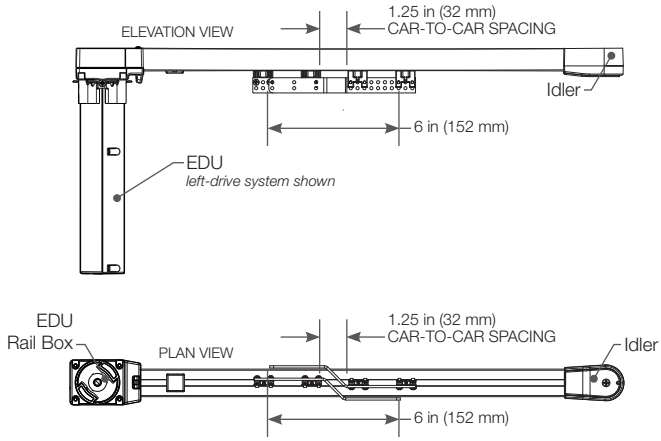

Job Name:	Model Numbers:	
Job Number:		

Pinch Pleat | Hanging Fabric

Drapes are typically sized so the bottom of the drapery track is located 4 in (101 mm) above the window casing. Location may need to be adjusted to accommodate the specific drapery size and application. Lutron recommends a drapery hook setting of 1/2 in (13 mm) from the top of the drape to the top of the hook (hooks not included). This locates the drapes just below the track and prevents it from rubbing on the track. It is recommended that a distance of 1/2-1 in (13-25 mm) be maintained between the bottom of fabric panel and the floor.

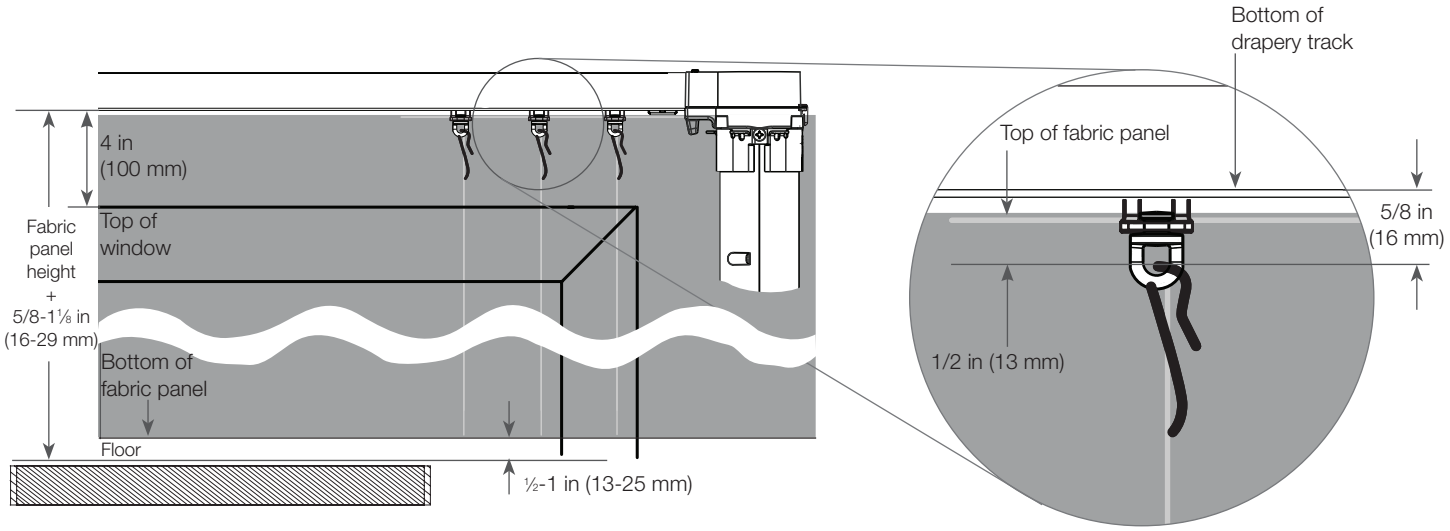

Drapery fabric return

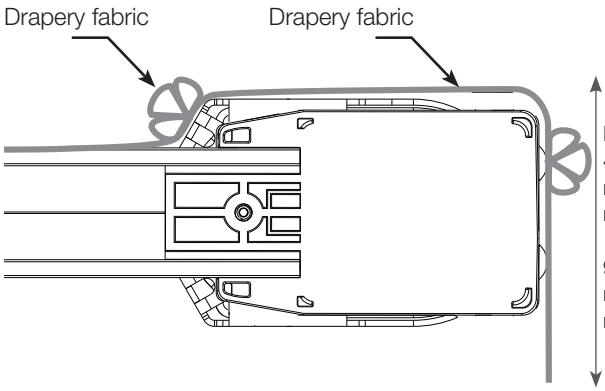

EDU in Original Orientation

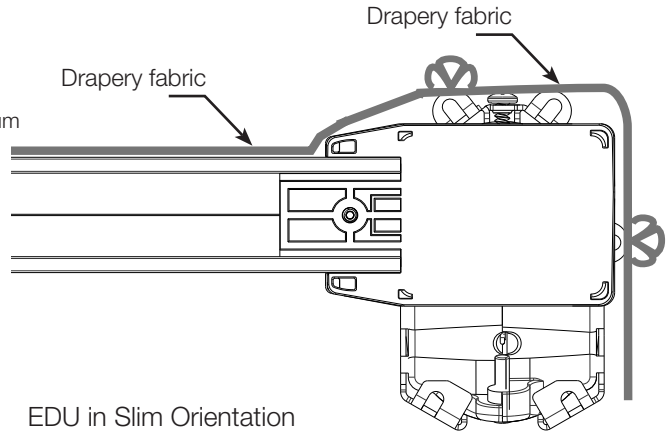

EDU in Slim Orientation

Job Name:	Model Numbers:	
Job Number:		

Ripple Fold Fabric Fullness

Fullness is determined by the string length between auxiliary carriers (S) and the total width of the fabric panel. Lutron offers fullness ratings of 80%, 100%, and 120%, based on standard snap spacing of 4.25 in (108 mm).

80% Fullness

Fabric panel width = track width + 80%
S = 2.375 in (60 mm)

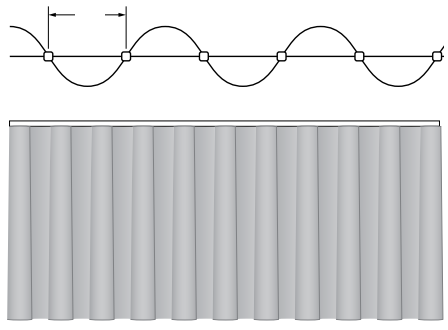

Stackback Example
(approximate; center-draw)

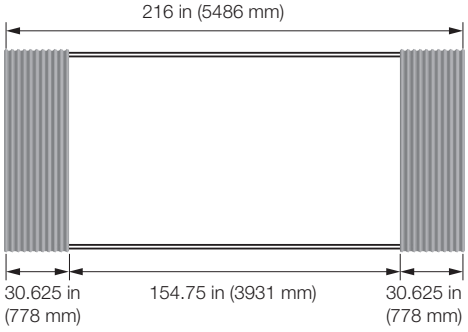

100% Fullness

Fabric panel width = track width + 100%
S = 2.125 in (54 mm)

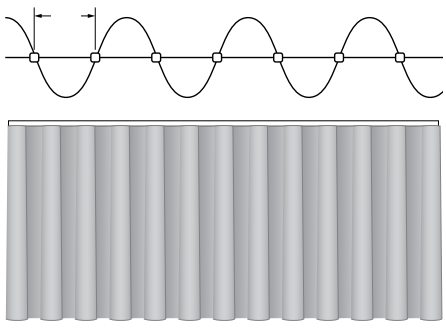

Stackback Example
(approximate; center-draw)

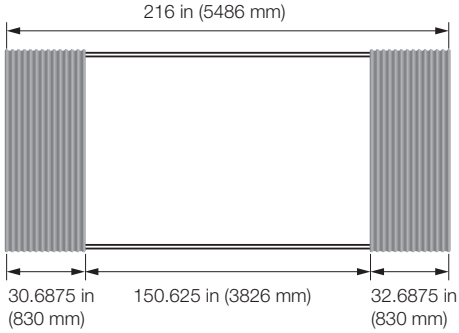

120% Fullness

Fabric panel width = track width + 120%
S = 1.875 in (48 mm)

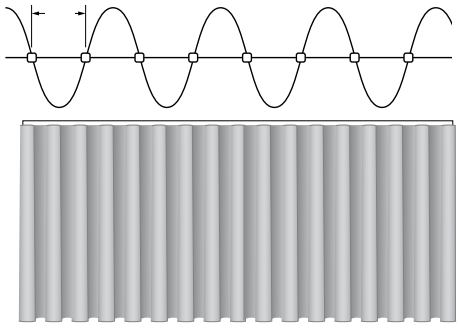

Stackback Example
(approximate; center-draw)

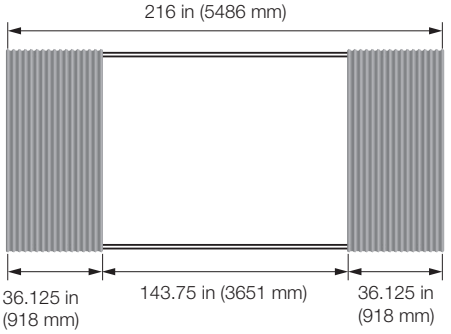

Job Name:	Model Numbers:	
Job Number:		

Ripple Fold | Configurations (without Pull-to-Start)

- Drapery track system compatible with Graber ripple fold snap tape
- Tracks available in three fullness factors: 80%, 100%, 120%

One-way draw

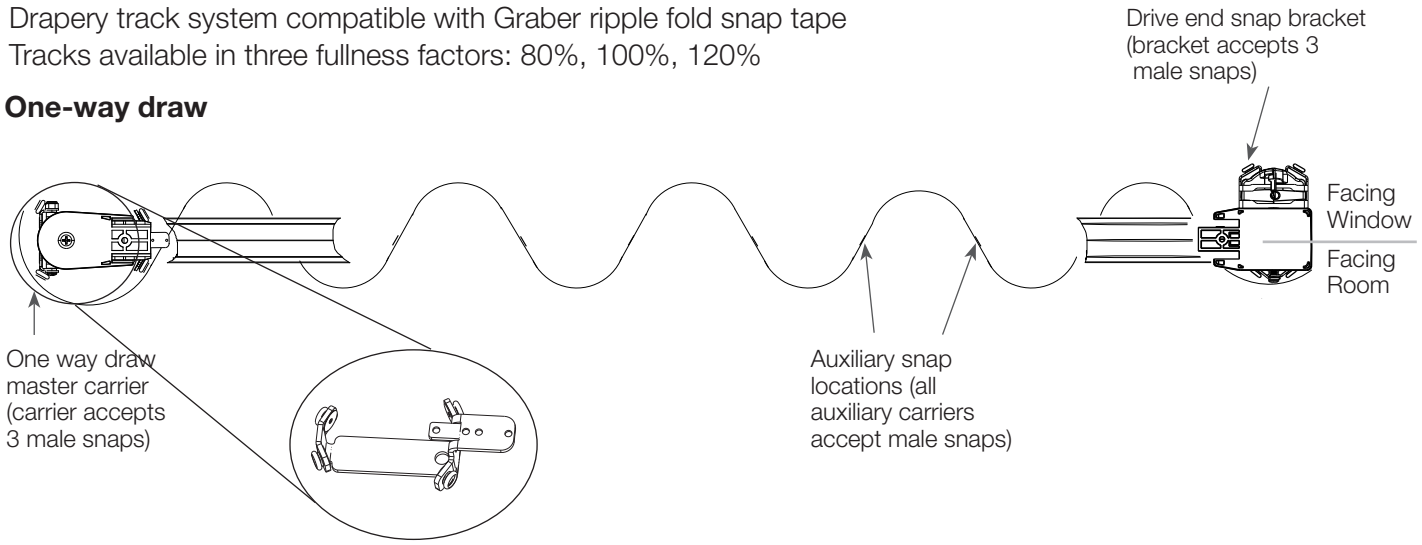

Center draw butt closure

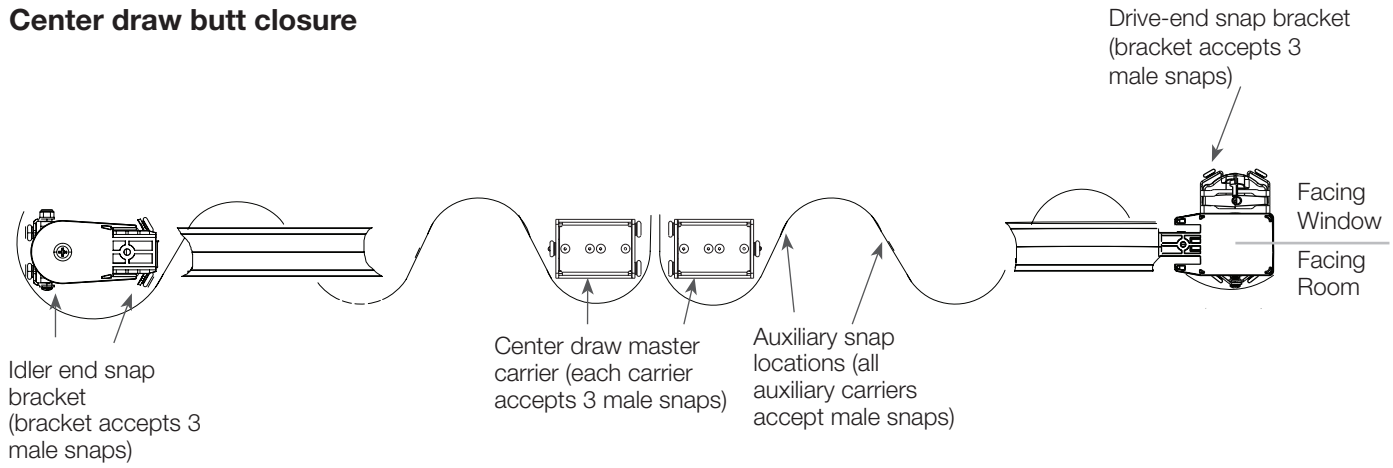

Extended overlap closure (custom option, contact Lutron for more information)

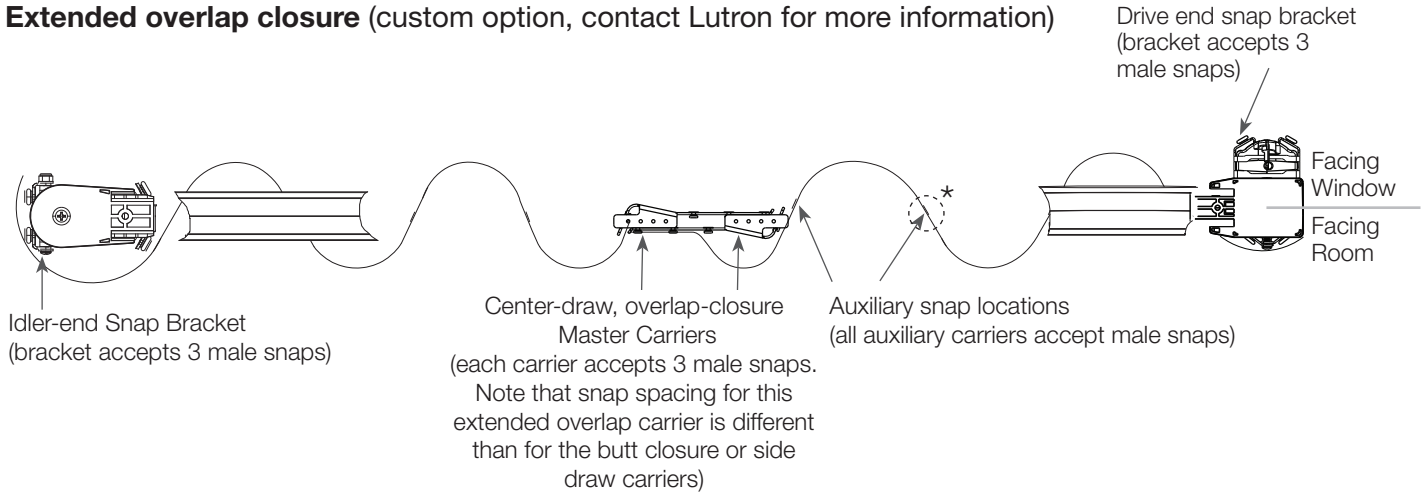

* The right fabric panel has one more auxiliary snap than the left.

Job Name:	Model Numbers:	
Job Number:		

Ripple Fold | Fabric Hanging

The bottom of the drapery track is to be mounted such that it is located a distance of 3/4-1 1/4 in (19-32 mm) + fabric panel height from the floor. Drapes are typically sized so the bottom of the drapery track and top of the fabric panel are located 4 in (101 mm) above the window casing. Location may need to be adjusted to accommodate the specific fabric panel height and application. It is recommended that a space of 1/2-1 in (13-25 mm) be maintained between the bottom of fabric panel and the floor.

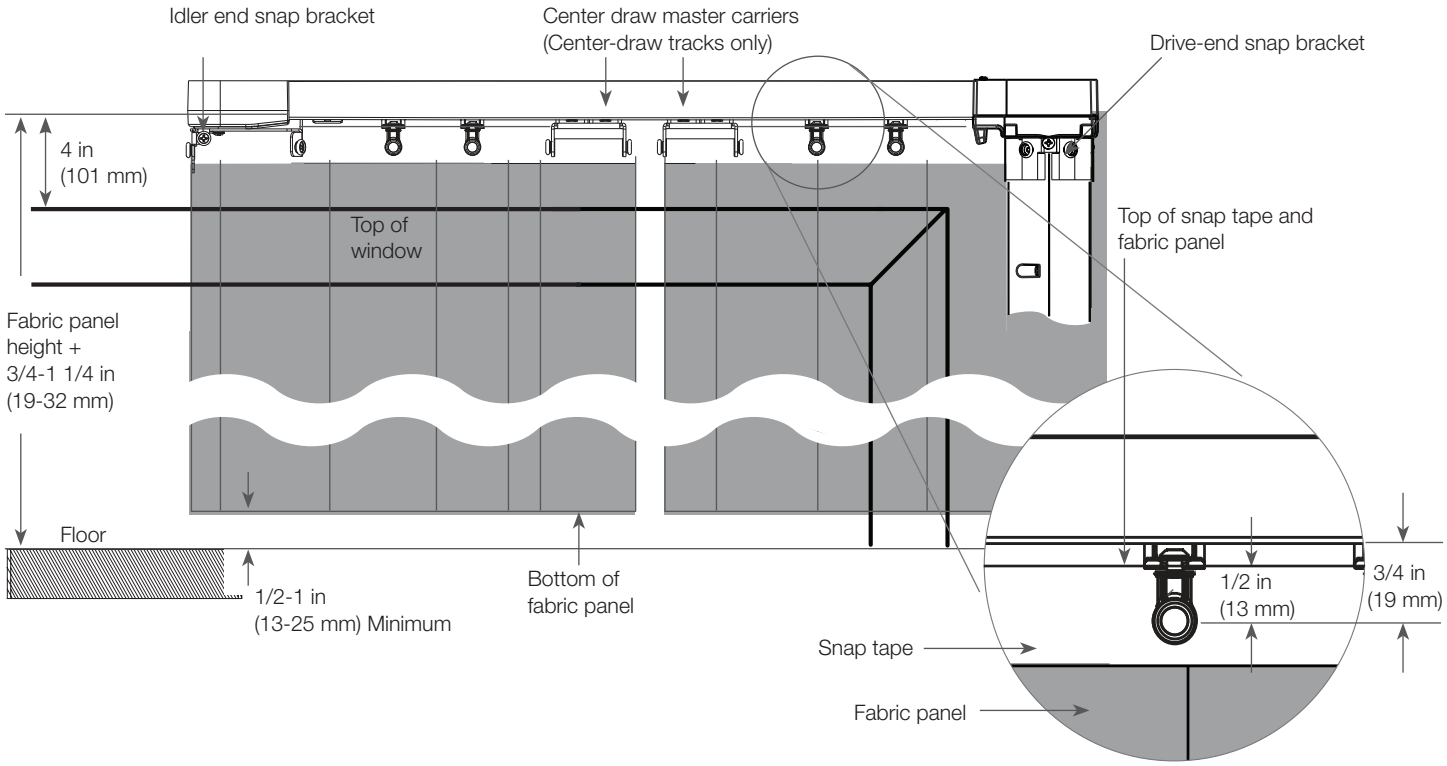

Job Name:	Model Numbers:	
Job Number:		

Ripple Fold | Drapery Tape Assembly (without Pull-to-Start)

The ripple fold drapery snap tape is attached to the top of the fabric panel by the drapery manufacturer. The number of snaps required is based on the Track Width, Draw Type and Fullness of the drapery. Refer to myProjects for the number of snaps required per panel for the given specifications. Left draw and Right draw configurations require one fabric panel. Center draw and Tandem draw configurations require two fabric panels. The Lutron ripple fold drapery system is compatible with Graber snap tape, which has a spacing of 4 1/4 in (108 mm) between snaps. The Buttmaster Carriers and the End Snap Brackets, require the outermost snap on both ends of the snap tape to be spaced 1 in (25 mm) from the adjacent snaps.

Left Draw and Right Configurations

Number of Panels — 1
Snap Tape Type — Graber
Inner Snap Spacing — 4 1/4 in (108 mm) typical
End Snap Spacing — 1 in (25 mm)
Snaps Per Panel — Varies based on Track Width, Draw Type and Fullness
Refer to myProjects for exact snap quantity

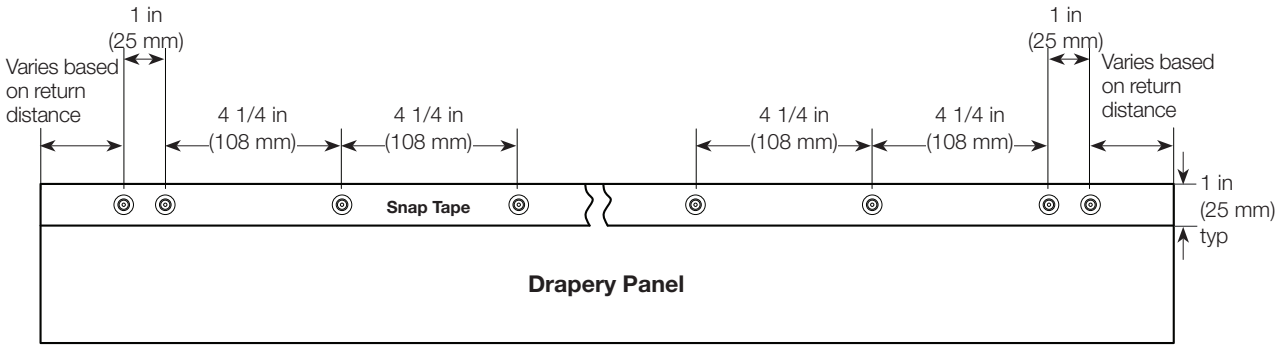

Center Draw and Tandem Draw Configurations

Number of Panels — 2
Snap Tape Type — Graber
Inner Snap Spacing — 4 1/4 in (108 mm) typical
End Snap Spacing — 1 in (25 mm)
Snaps Per Panel — Varies based on Track Width, Draw Type and Fullness
Refer to myProjects for exact snap quantity

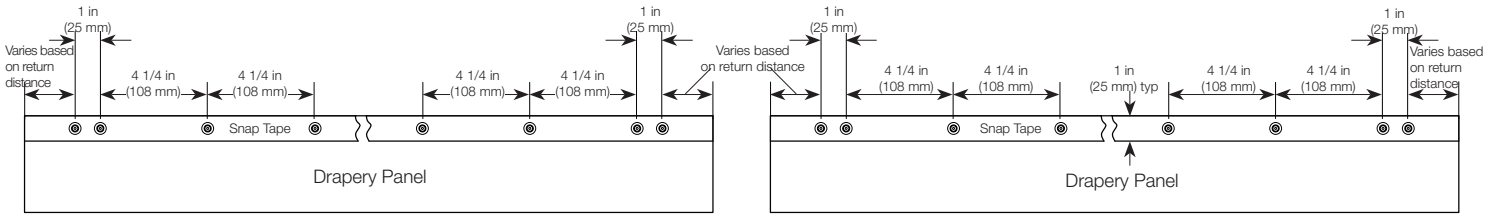

Job Name:	Model Numbers:	
Job Number:		

Ripple Fold | Drapery Tape Assembly (without Pull-to-Start)

Extended Overlap-Closure Snap Spacing

The ripple fold drapery snap tape is attached to the top of the drapery panel by the drapery manufacturer. The total number of snaps required for each drapery panel is based on the track width, draw type and fullness of the drapery. Center draw and tandem center draw configurations require two drapery panels. The Lutron ripple fold drapery system is compatible with Graber snap tape, which has a spacing of 4.25 in (108 mm).

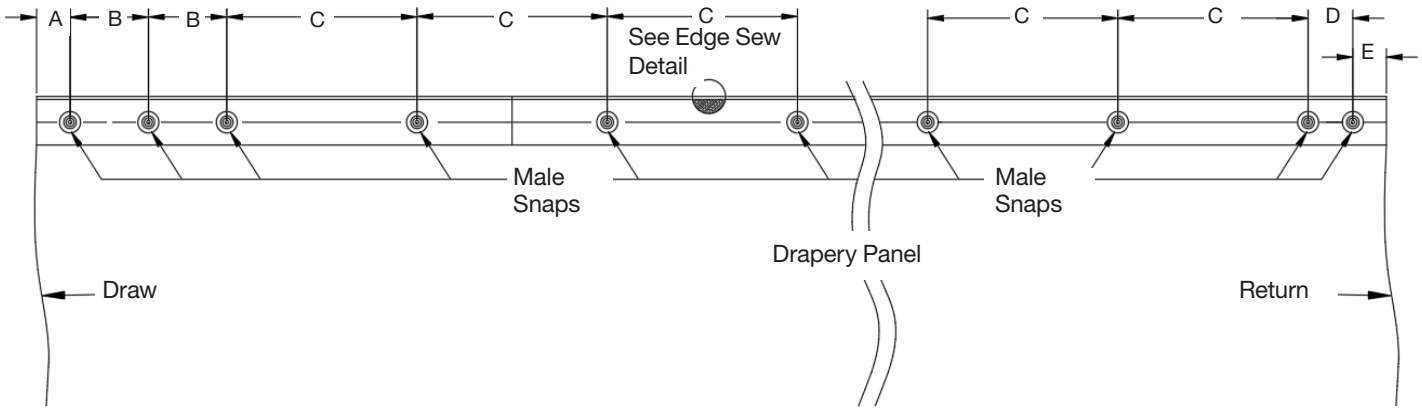

Custom Snap Spacing

A = 0.75 in (19 mm)

B = 1.75 in (45 mm)

C = Standard ripple fold snap tape spacing of 4.25 in (108 mm)

D = 1.0 in (25 mm)

E = Varies with return distance

Edge Sew Detail

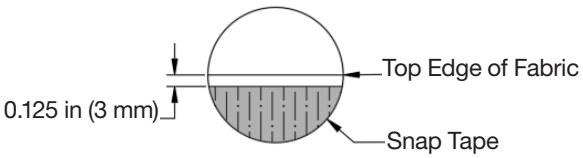

Job Name:	Model Numbers:	
Job Number:		

Ripple Fold | Configurations (with Pull-to-Start)

One-Way Draw

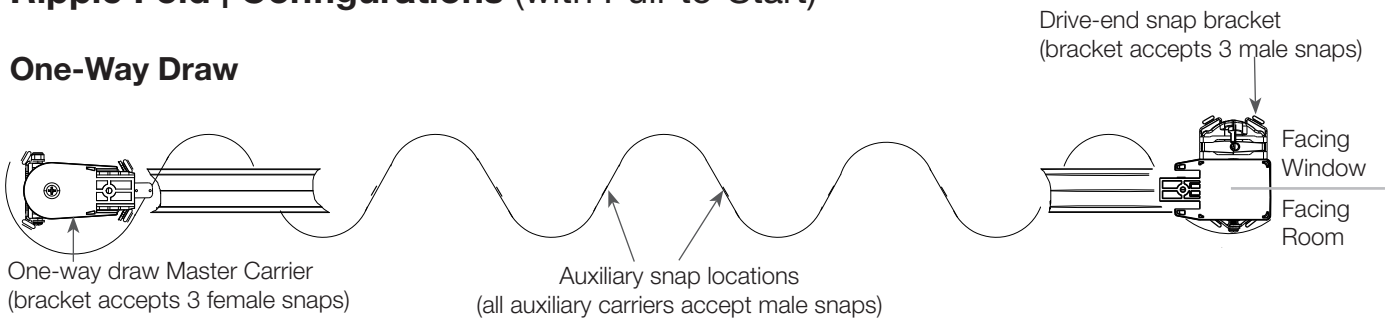

Center Draw

Butt-closure (default)

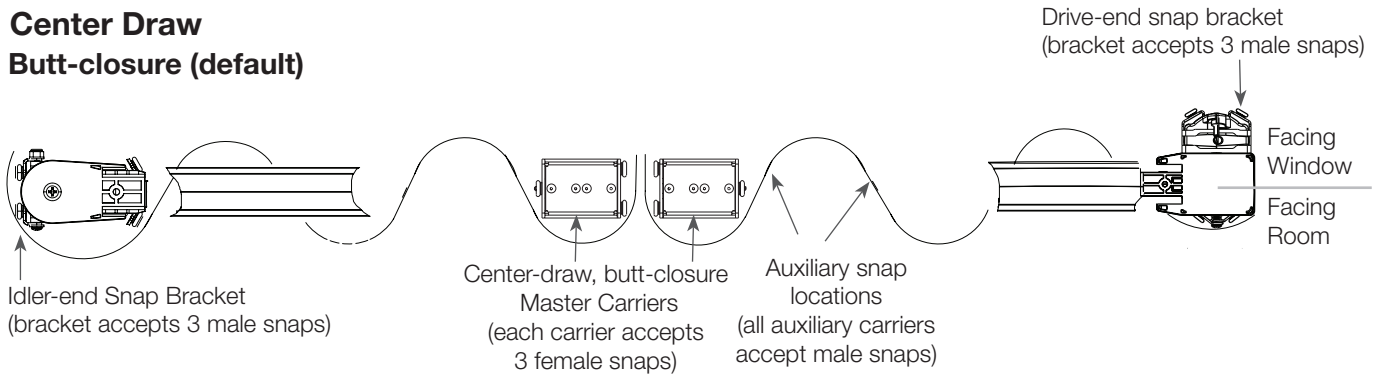

Overlap-closure (custom option, contact Lutron for more information)

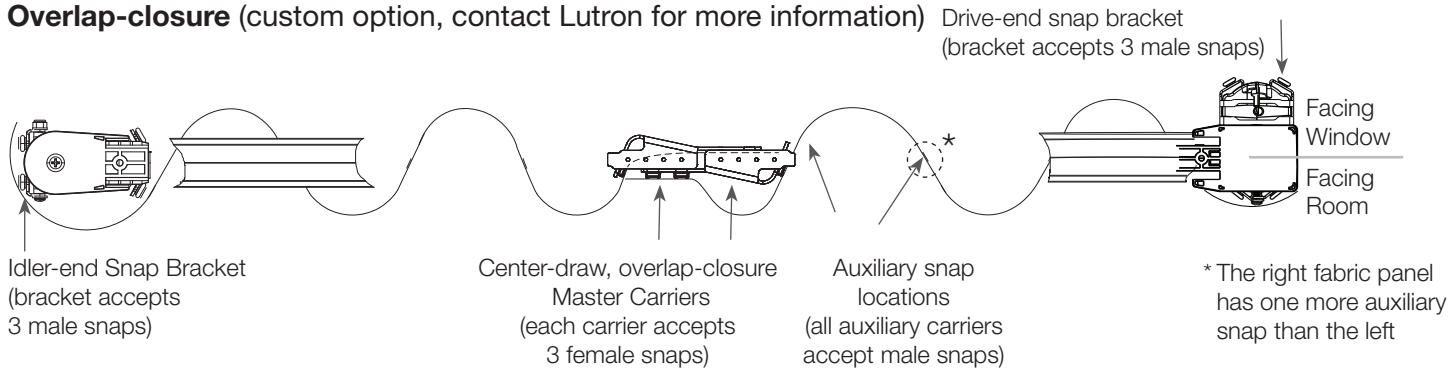

Extended Overlap-closure (custom option, contact Lutron for more information)

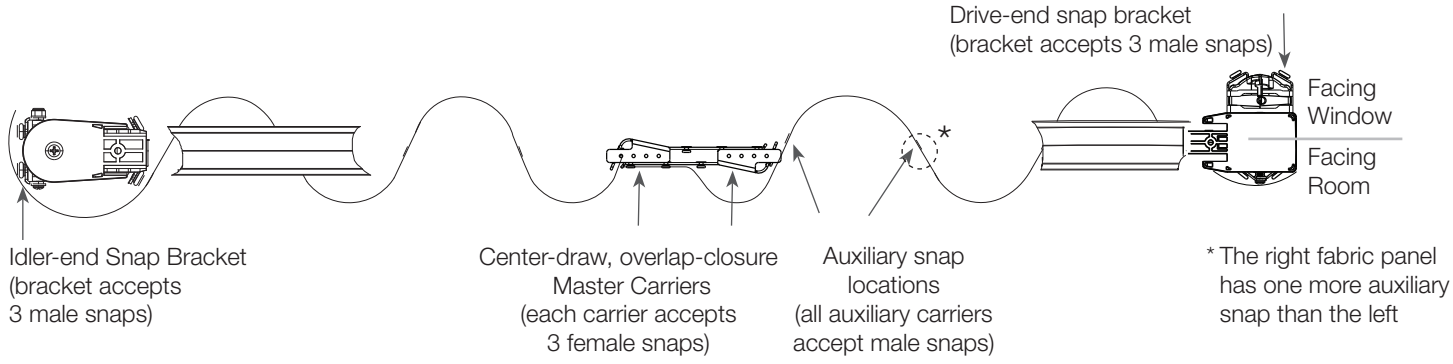

Note: Each carrier accepts 3 female snaps. Note that snap spacing for this extended overlap carrier is different than for the other pull-to-start carriers.

Job Name:	Model Numbers:	
Job Number:		

Ripple Fold | Drapery Tape Assembly (with Pull-to-Start)

The Lutron ripple fold drapery system is compatible with standard ripple fold snap tape with spacing of 4.25 in (108 mm) between snaps

- Standard carriers accept male snaps; quantity required varies with track width
- Three (3) female snaps are required at the draw end as shown
  - Compatible female snap tape is available from Alan Richard Textiles, Ltd.
    By the yd: alanrichardtextiles.com/store/DRFT02-Y.html
    By 100 yd (91.4 m) roll: alanrichardtextiles.com/store/DRFT02.html
- Single-draw configurations require one drapery panel
- Center-draw configurations require two drapery panels
  - Butt-closure: snap layout shown below mirrored on the second panel
  - Overlap-closure: the draw and return end snap layouts shown below are mirrored on the second panel, and the right panel requires one more auxiliary snap than the left. (See the Overlap-Closure diagram on previous page.)

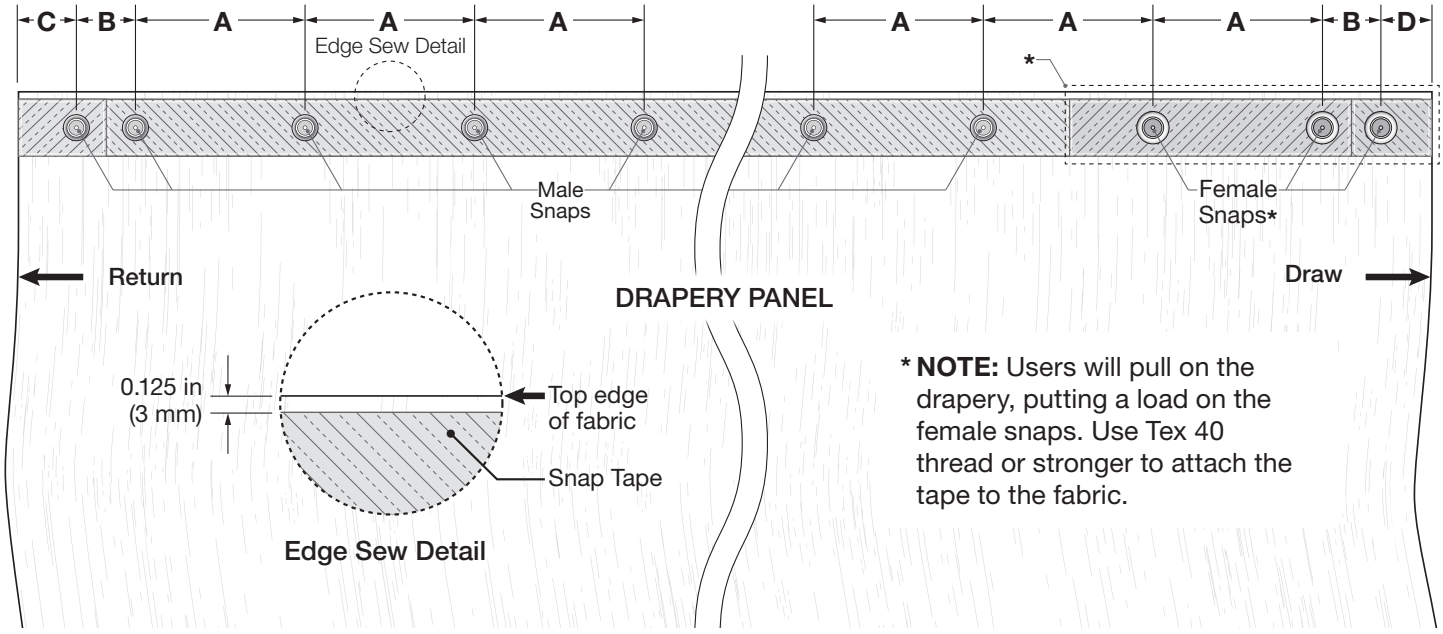

A = Standard ripple fold snap tape spacing of 4.25 in (108 mm)

B = 1 in (25 mm) for one-way draw, butt-closure, and overlap-closure master carriers

2.25 in (57 mm) for the extended overlap-closure master carrier

C = Varies with return distance

D = 0.75 in (19 mm)

Job Name:	Model Numbers:	
Job Number:		

QS Drapery Track Systems | Single Drive Wiring

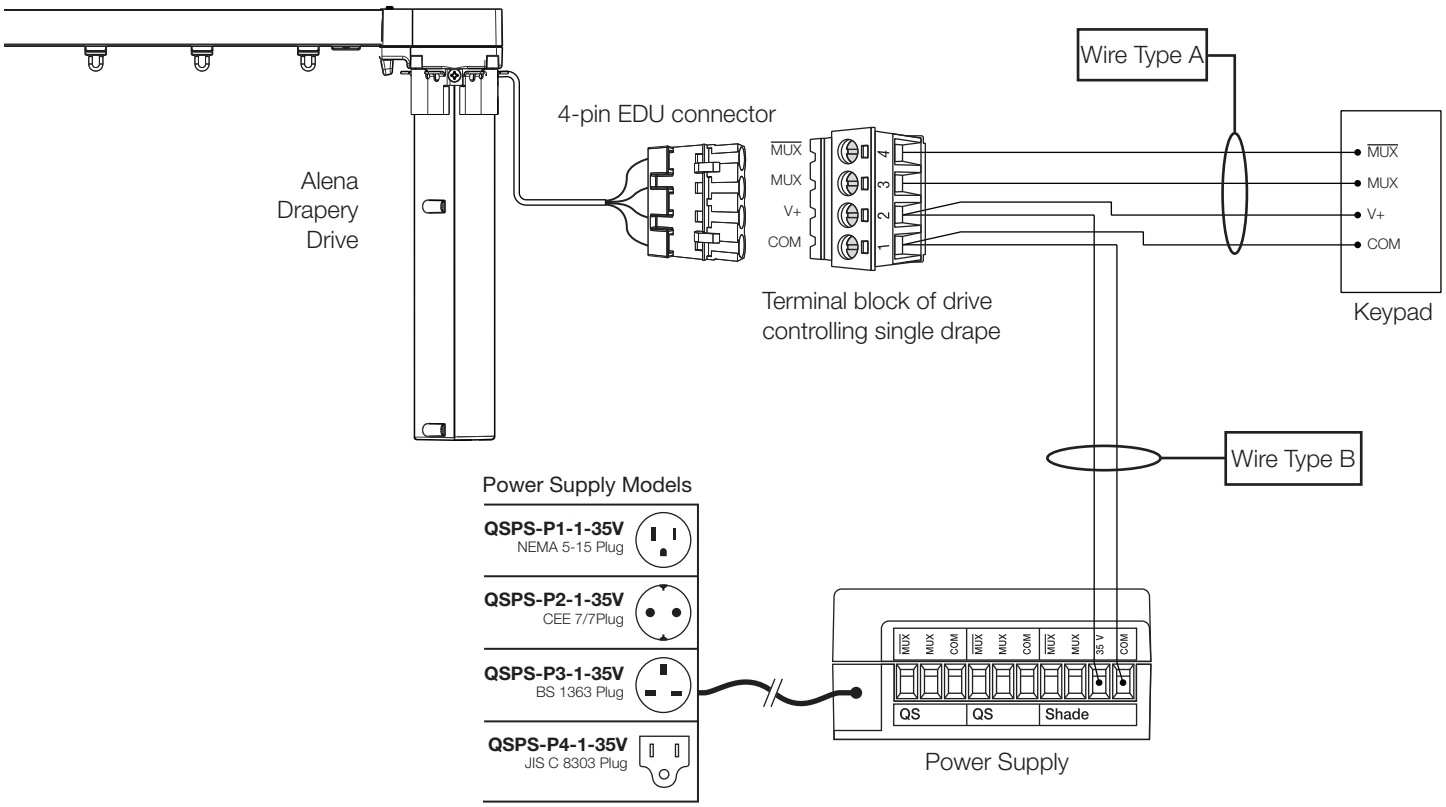

Wiring types	Purpose	Wire options
A	Keypad power and COM	18 - 22 AWG (1.0 - 0.5 mm²) - 250 ft (75 m) max (MUX / $\overline{\text{MUX}}$ twisted pair, shielded) Lutron P/N GRX-CBL-346S-500
B	Drive power (power supply to drive)	12 AWG (4.0 mm²) - 250 ft (75 m) max 16 AWG (1.5 mm²) - 100 ft (30 m) max Lutron P/N QSHY-CBL-M-1000, non-plenum Lutron P/N QSHY-CBLP-M-1000, plenum 18 AWG (1.0 mm²) - 50 ft (17 m) max

Job Name:	Model Numbers:	
Job Number:		

QS Wireless Drapery Track Systems | Single Drive Wiring

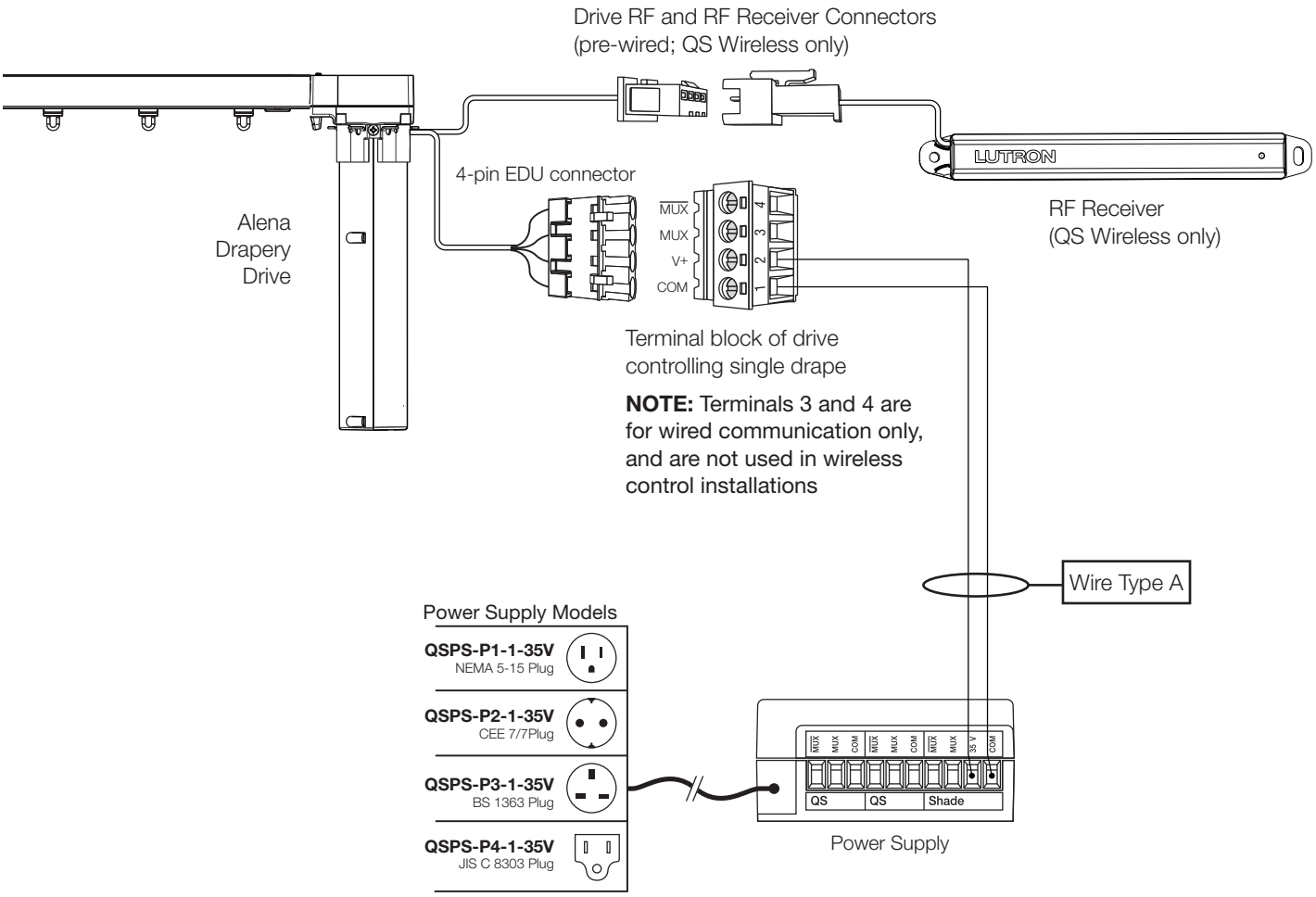

Wiring types	Purpose	Wire options
A	Drive power (power supply to drive)	12 AWG (4.0 mm²) - 250 ft (75 m) max 16 AWG (1.5 mm²) - 100 ft (30 m) max Lutron P/N QSHY-CBL-M-1000, non-plenum Lutron P/N QSHY-CBLP-M-1000, plenum 18 AWG (1.0 mm²) - 50 ft (17 m) max

Lutron, Athena, Caséta, GRAFIK Eye, HomeWorks, myRoom, Pico, RA2 Select, RadioRA 2, RadioRA 3, seeTouch, Sivoia QS, Quantum, and any related trade dress and logos are trademarks or registered trademarks of Lutron Electronics Co., Inc. in the US and/or other countries.

Job Name:	Model Numbers:	
Job Number:		